TERAL

AMSUS

Stainless Steel Submersible Pump
Borehole Range 4 to 10 inches

50 Hz

TERAL INC.

Japan Since 1918

Applications

- Underground raw-water supply
- Mine de-watering
- Fountain and water display application
- Pressure boosting
- Irrigation and Livestock watering

Model code

125 L AMSUS 8 - 5 18 - 5 /A B

- B — Second reduced-dia. Impeller (A > B > C)
- A — First reduced-dia. Impeller (A > B > C)
- 5 — Number of stages
- 18 — Output in Kw: 18.5kW
- 5 — Frequency 50Hz: 5, 60Hz: 6
- 8 — Diameter of pump in inch
- AMSUS — Model (AMSUS = SUS304, AMSUSN = SUS316)
- L — Auxiliary code
- 125 — Discharge size in mm

Example: 5/AB → 5 stages
First reduced - dia. impeller A
Second reduced - dia. impeller B
Complete impeller: 3 (5-1-1)

Features

- **High Durability and Long Life**
  All metal parts are made of Stainless Steel which are designed and built to provide superior strength for maximum wear resistance and tear of sand
- **Optimum Hydraulic Properties**
  The optimal design of impellers and diffusers enables the best possible hydraulic performance and great efficiency
  Heavy duty stainless steel discharge head with built-in non-return valve prevents back flow, and reduce the risk of destructive water hammer
- **Pump Performance**
  High total head with multi stage up to 502m
- **Conformable to**
  The AMSUS mounting specifications are fully complied to NEMA standard

Specifications

- Liquid : Clean, non-corrosive and non-abrasive water (Max 30°C) without fibres
  Permissible amount of sand : Max. 50g/m3
- Revolution : 3000min-1 at 50Hz
- Structure
  Impeller : Radial flow (32AMSUS4/ 32L AMSUS4/ 32M AMSUS4/ 40AMSUS4)
  Mixed flow (All model)
  Bearing : NBR
- Material
  Impeller : Stainless steel (SUS304) Option : Stainless Steel (SUS316)
  Shaft : Stainless steel (SUS431)
  Discharge Casing : Stainless steel (SUS304) Option : Stainless Steel (SUS316)

Selection Chart

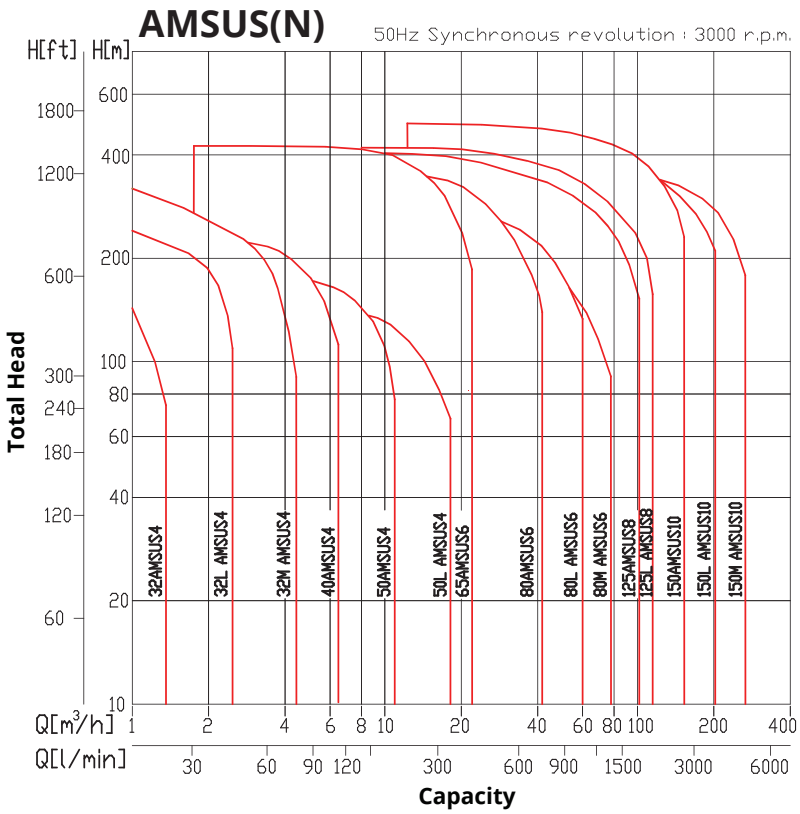

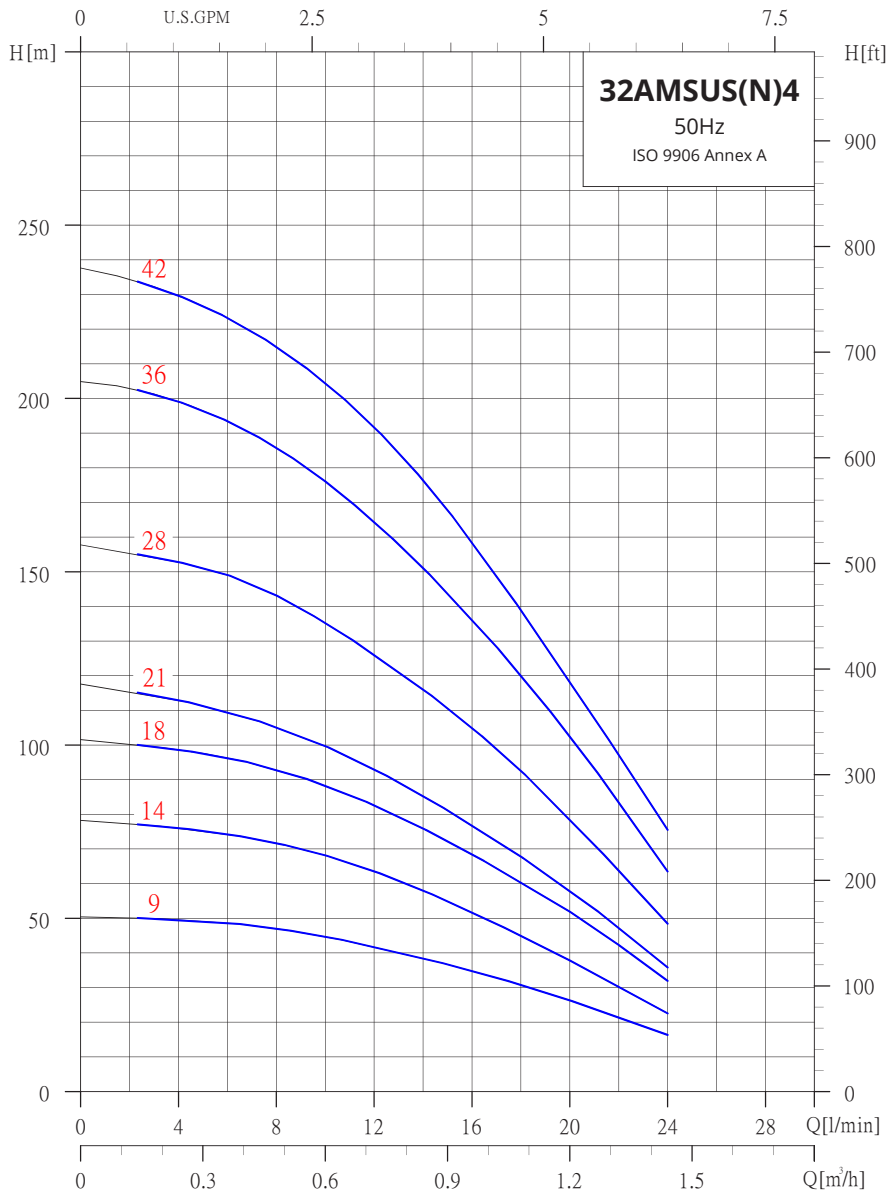

Dimensions and weights

Model	4" Motor			Dimension (mm)			Net Weight (Kg)	
	P2 (Kw)	Lm	Cable Length (mm)	Lp	ΦB	D	Pump	Bare Pump
32AMSUS(N)4-5.37-9	0.37	330	1700	356	RP/NPT 1-1/4"	98	9.6	2.9
32AMSUS(N)4-5.37-14	0.37	330	1700	461		98	10.4	3.7
32AMSUS(N)4-5.55-18	0.55	346	1700	545		98	11.8	4.4
32AMSUS(N)4-5.55-21	0.55	346	1700	608		98	12.4	5.0
32AMSUS(N)4-5.75-28	0.75	365	1700	755		98	14.4	6.2
32AMSUS(N)4-51.1-36	1.1	380	1700	946		98	18.8	9.9
32AMSUS(N)4-51.1-42	1.1	380	1700	1072		98	20.2	11.3

D is maximum diameter of pump including of cable guard and motor

32AMSUS(N)4

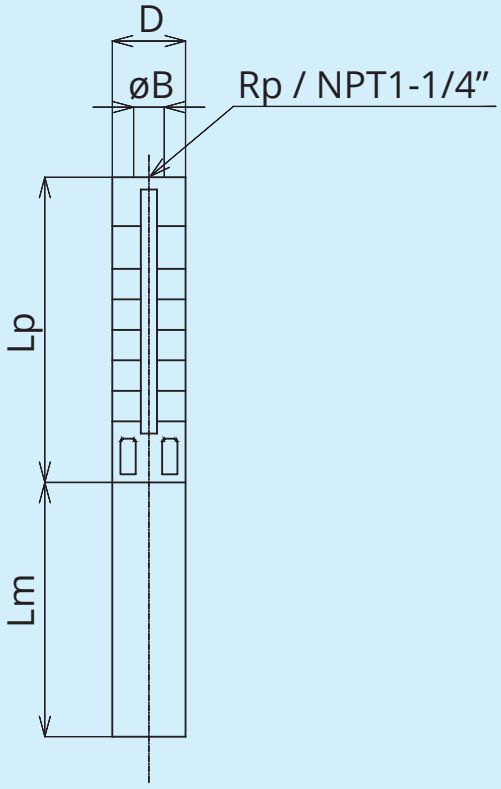

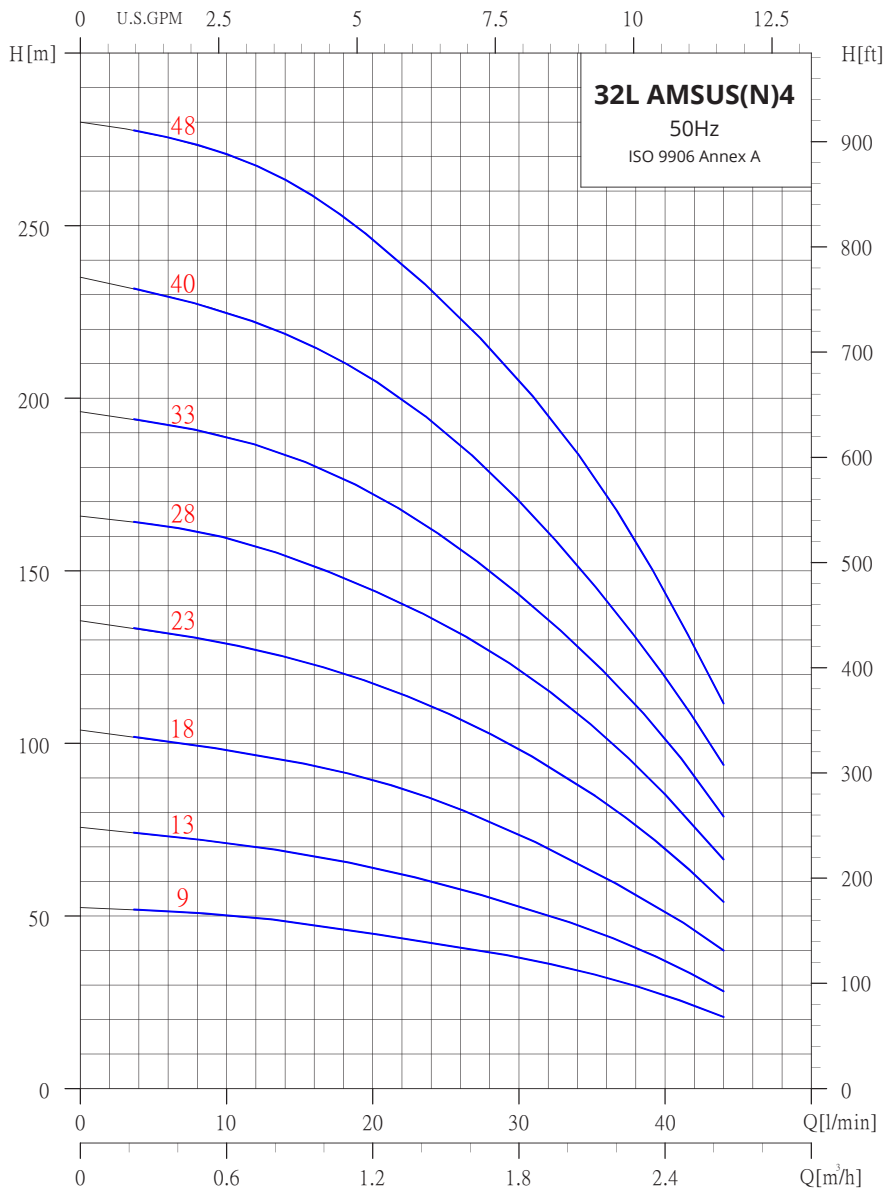

Dimensions and weights

Model	4" Motor			Dimension (mm)			Net Weight (Kg)	
	P2 (Kw)	Lm	Cable Length (mm)	Lp	ΦB	D	Pump	Bare Pump
32L AMSUS(N)4-5.37-9	0.37	330	1700	356	RP/NPT 1-1/4"	98	9.7	3.0
32L AMSUS(N)4-5.55-13	0.55	346	1700	440		98	11.2	3.8
32L AMSUS(N)4-5.75-18	0.75	365	1700	545		98	12.9	4.7
32L AMSUS(N)4-51.1-23	1.1	380	1700	650		98	14.6	5.7
32L AMSUS(N)4-51.5-28	1.5	405	1700	755		98	16.6	6.6
32L AMSUS(N)4-51.5-33	1.5	405	1700	883		98	19.7	9.7
32L AMSUS(N)4-52.2-40	2.2	440	2500	1030		98	23.1	11.5
32L AMSUS(N)4-52.2-48	2.2	440	2500	1198		98	25.1	13.5

D is maximum diameter of pump including of cable guard and motor

32L AMSUS(N)4

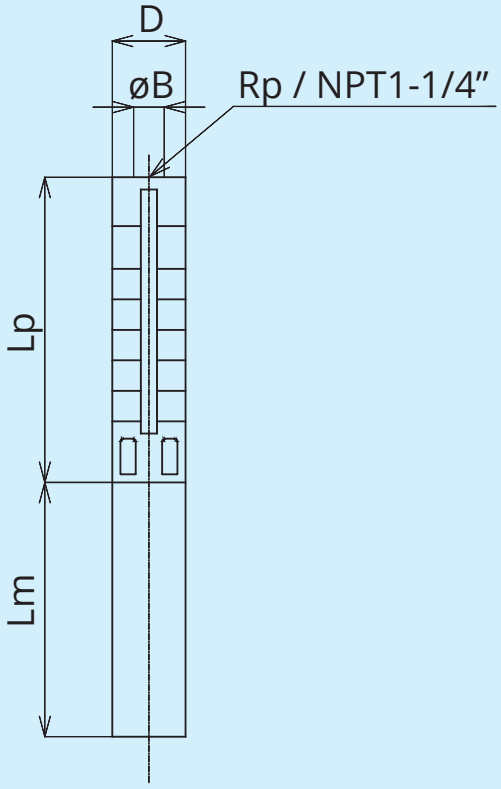

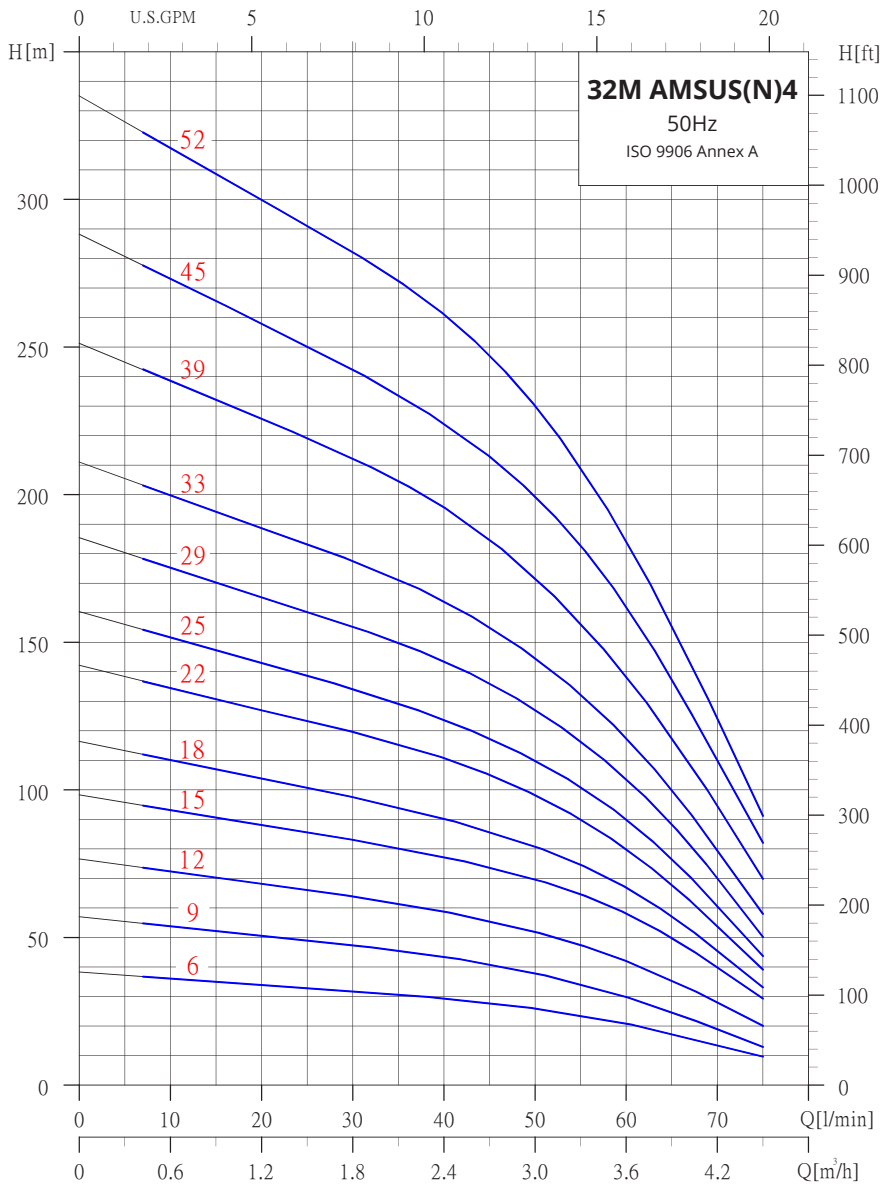

32M AMSUS(N)4

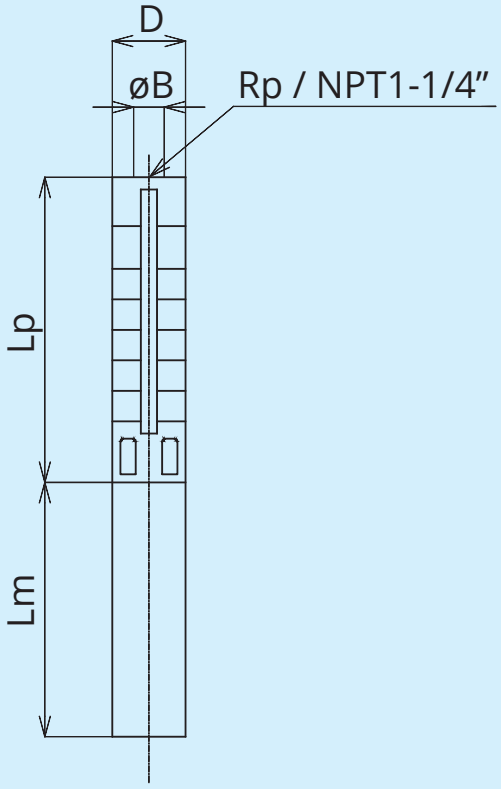

Dimensions and weights

Model	4" Motor			Dimension (mm)			Net Weight (Kg)	
	P2 (Kw)	Lm	Cable Length (mm)	Lp	ΦB	D	Pump	Bare Pump
32M AMSUS(N)4-5.37-6	0.37	330	1700	293	RP/NPT 1-1/4"	98	9.1	2.4
32M AMSUS(N)4-5.55-9	0.55	346	1700	356		98	10.4	3.0
32M AMSUS(N)4-5.75-12	0.75	365	1700	419		98	11.8	3.6
32M AMSUS(N)4-51.1-15	1.1	380	1700	482		98	13.1	4.2
32M AMSUS(N)4-51.1-18	1.1	380	1700	545		98	13.6	4.7
32M AMSUS(N)4-51.5-22	1.5	405	1700	629		98	15.5	5.5
32M AMSUS(N)4-51.5-25	1.5	405	1700	692		98	16.1	6.1
32M AMSUS(N)4-52.2-29	2.2	440	2500	776		98	18.4	6.8
32M AMSUS(N)4-52.2-33	2.2	440	2500	883		98	21.3	9.7
32M AMSUS(N)4-53.0-39	3.0	516	2500	1009		98	26.4	11.2
32M AMSUS(N)4-53.0-45	3.0	516	2500	1135		98	27.9	12.7
32M AMSUS(N)4-54.0-52	4.0	607	2500	1282		98	34.0	14.5

D is maximum diameter of pump including of cable guard and motor

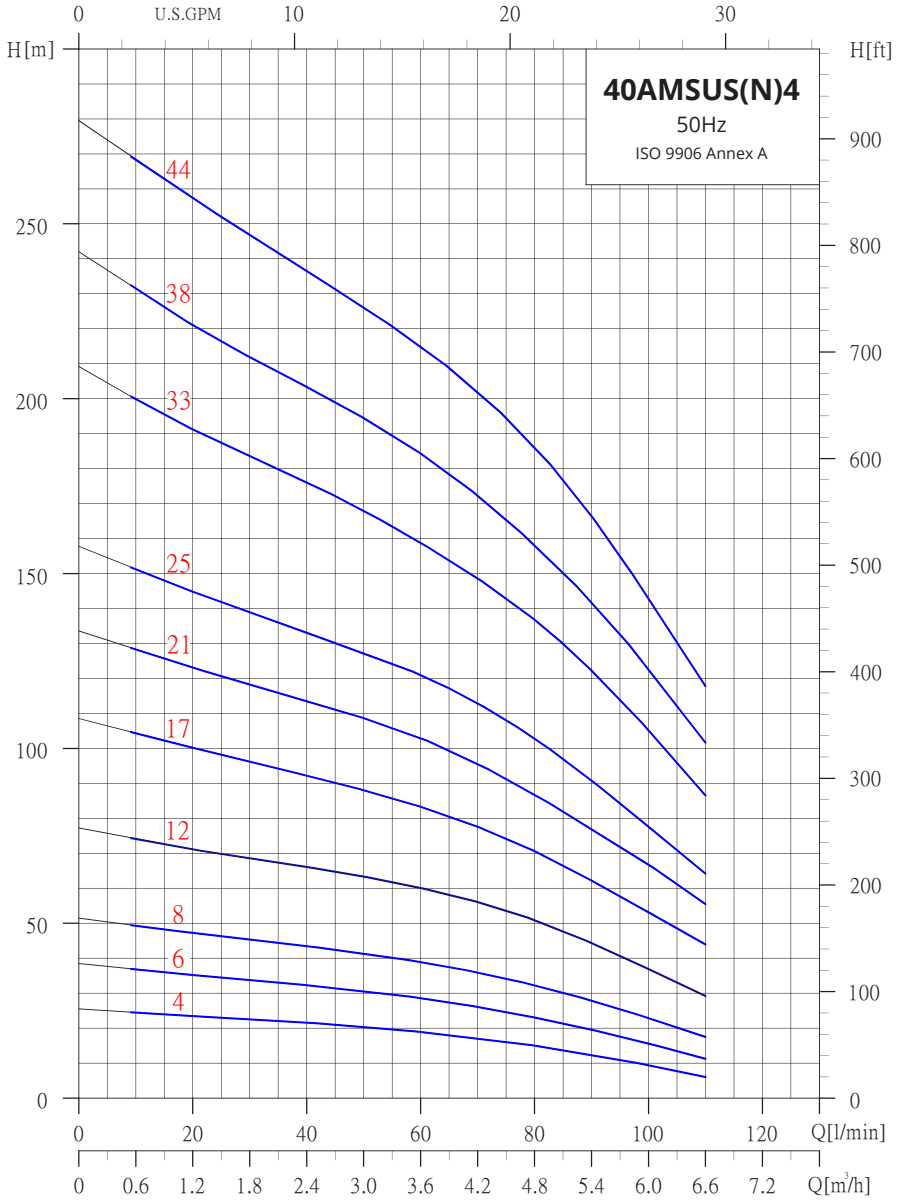

40AMSUS(N)4

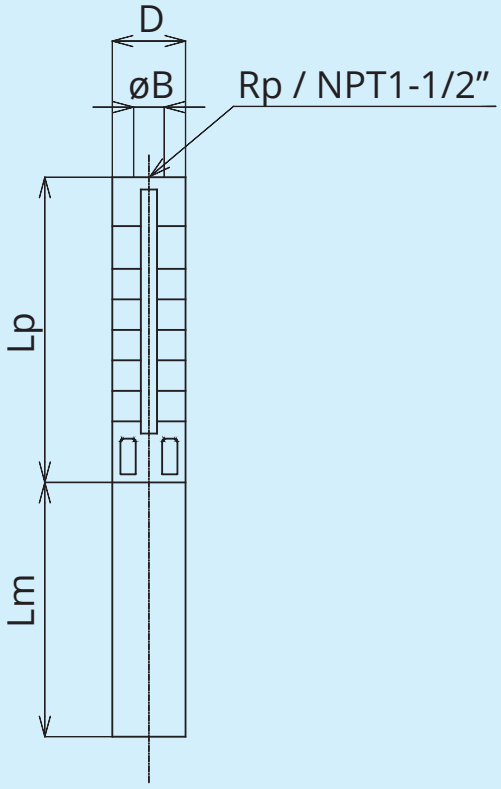

Dimensions and weights

Model	4" Motor			Dimension (mm)			Net Weight (Kg)	
	P2 (Kw)	Lm	Cable Length (mm)	Lp	ΦB	D	Pump	Bare Pump
40AMSUS(N)4-5.37-4	0.37	330	1700	251	RP/NPT 1-1/2"	98	8.7	2.0
40AMSUS(N)4-5.55-6	0.55	346	1700	293		98	9.8	2.4
40AMSUS(N)4-5.75-8	0.75	365	1700	335		98	11.0	2.8
40AMSUS(N)4-51.1-12	1.1	380	1700	419		98	12.5	3.6
40AMSUS(N)4-51.5-17	1.5	405	1700	524		98	14.5	4.5
40AMSUS(N)4-52.2-21	2.2	440	2500	608		98	16.9	5.3
40AMSUS(N)4-52.2-25	2.2	440	2500	692		98	17.6	6.0
40AMSUS(N)4-53.0-33	3.0	516	2500	868		98	24.8	9.6
40AMSUS(N)4-54.0-38	4.0	607	2500	973		98	30.4	10.9
40AMSUS(N)4-54.0-44	4.0	607	2500	1099		98	31.9	12.4

D is maximum diameter of pump including of cable guard and motor

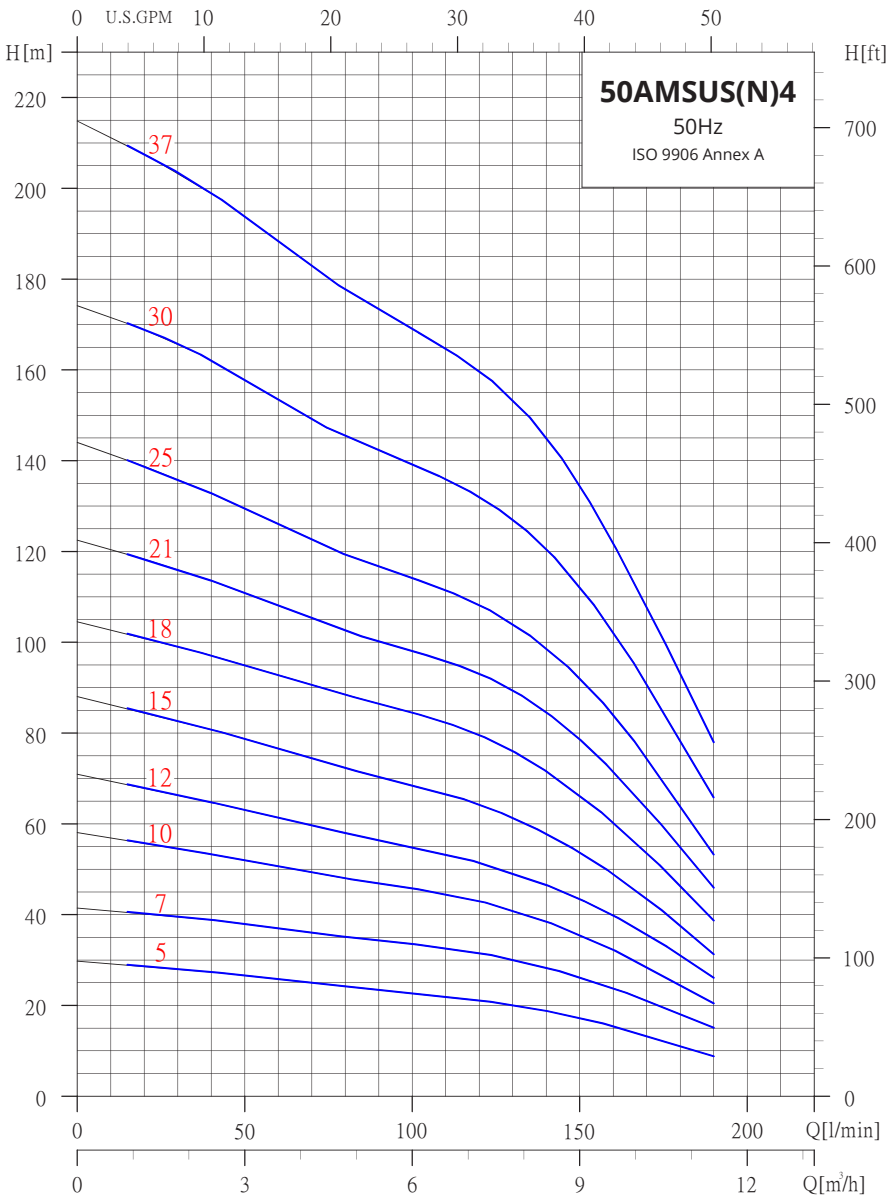

Dimensions and weights

Model	4" Motor			Dimension (mm)			Net Weight (Kg)	
	P2 (Kw)	Lm	Cable Length (mm)	Lp	ΦB	D	Pump	Bare Pump
50AMSUS(N)4-5.75-5	0.75	365	1700	412	RP/NPT 2"	98	12.5	4.3
50AMSUS(N)4-51.1-7	1.1	380	1700	496		98	14.2	5.3
50AMSUS(N)4-51.5-10	1.5	405	1700	622		98	16.8	6.8
50AMSUS(N)4-52.2-12	2.2	440	2500	706		98	19.4	7.8
50AMSUS(N)4-52.2-15	2.2	440	2500	832		98	20.9	9.3
50AMSUS(N)4-53.0-18	3.0	516	2500	958		98	26.0	10.8
50AMSUS(N)4-54.0-21	4.0	607	2500	1084		98	31.8	12.3
50AMSUS(N)4-54.0-25	4.0	607	2500	1252		98	33.8	14.3
50AMSUS(N)4-55.5-30	5.5	683	2500	1462		98	39.9	16.8
50AMSUS(N)4-55.5-37	5.5	683	2500	1753		98	43.4	20.3

D is maximum diameter of pump including of cable guard and motor

50AMSUS(N)4

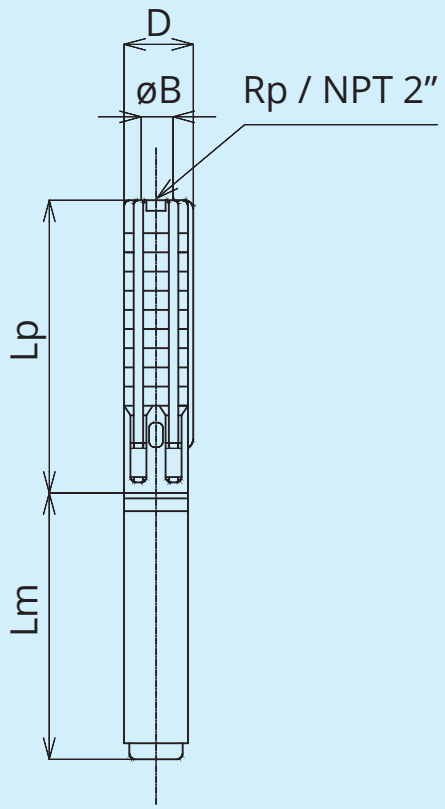

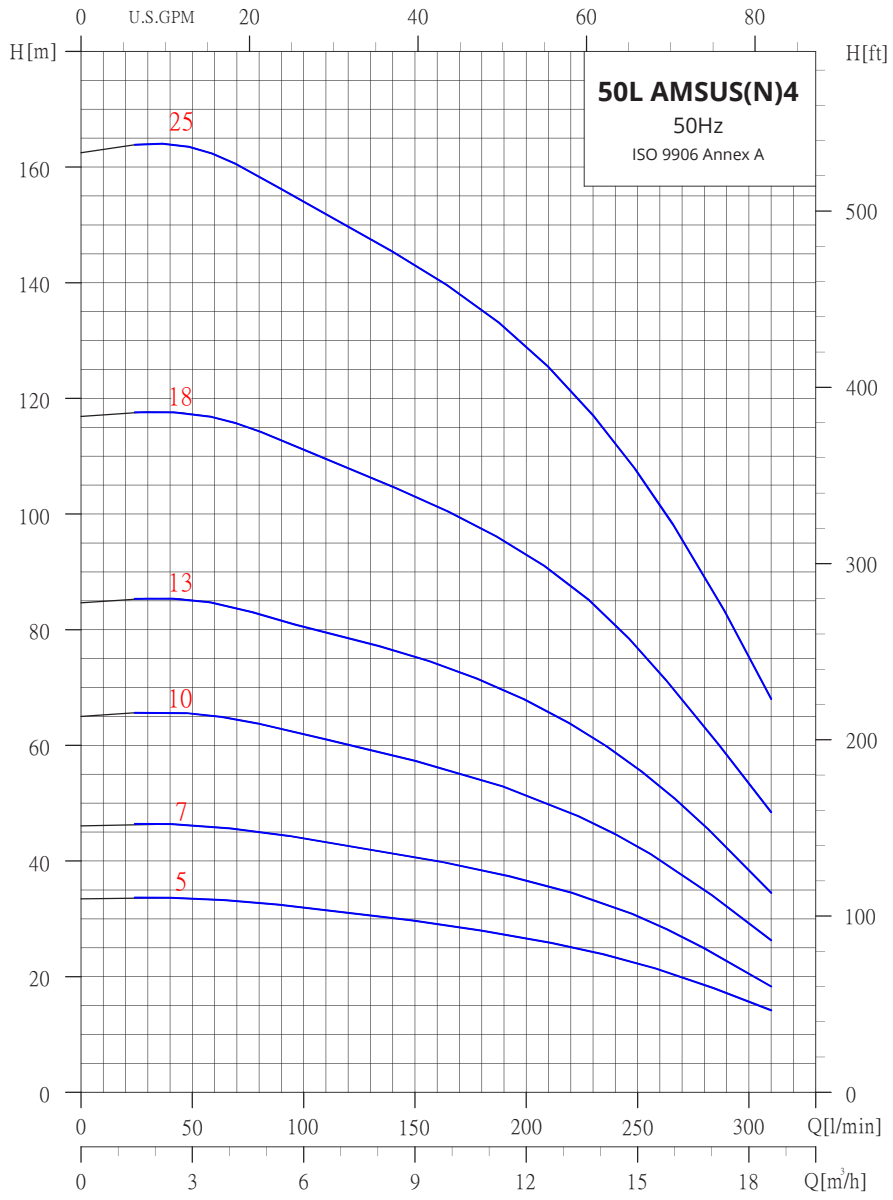

50L AMSUS(N)4

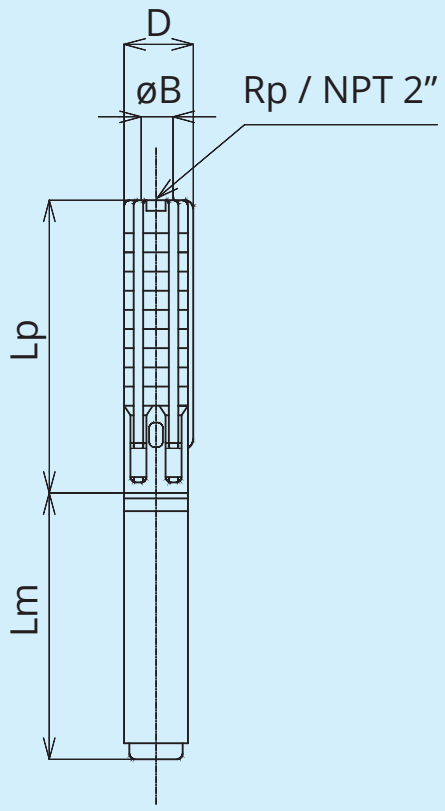

Dimensions and weights

Model	4" Motor			Dimension (mm)			Net Weight (Kg)	
	P2 (Kw)	Lm	Cable Length (mm)	Lp	ΦB	D	Pump	Bare Pump
50L AMSUS(N)4-51.5-5	1.5	405	1700	505	RP/NPT 2"	98	15.0	5.0
50L AMSUS(N)4-52.2-7	2.2	440	2500	635		98	17.9	6.3
50L AMSUS(N)4-53.0-10	3.0	516	2500	830		98	23.4	8.2
50L AMSUS(N)4-54.0-13	4.0	607	2500	1025		98	29.7	10.2
50L AMSUS(N)4-55.5-18	5.5	683	2500	1350		98	36.5	13.4
50L AMSUS(N)4-57.5-25	7.5	783	2500	1805		98	45.3	17.8

D is maximum diameter of pump including of cable guard and motor

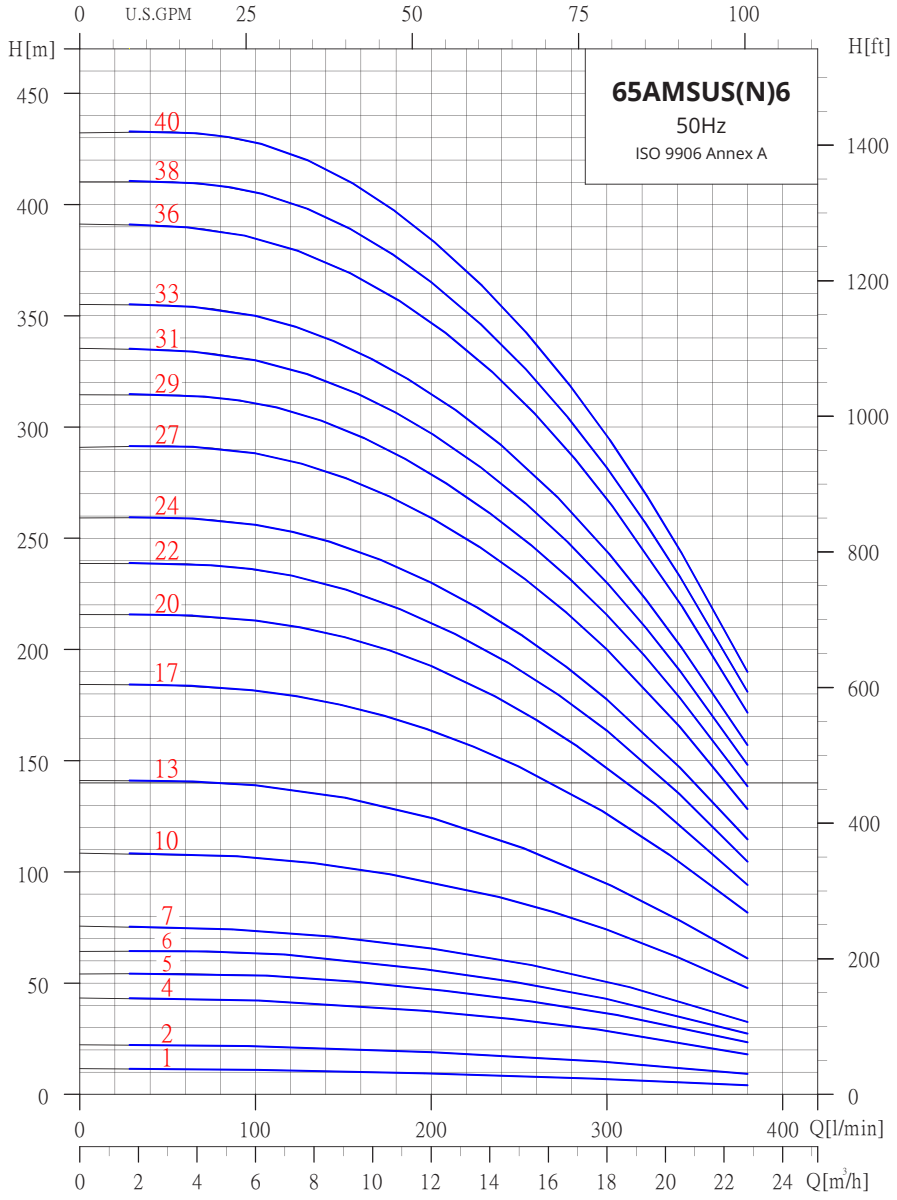

65AMSUS(N)6

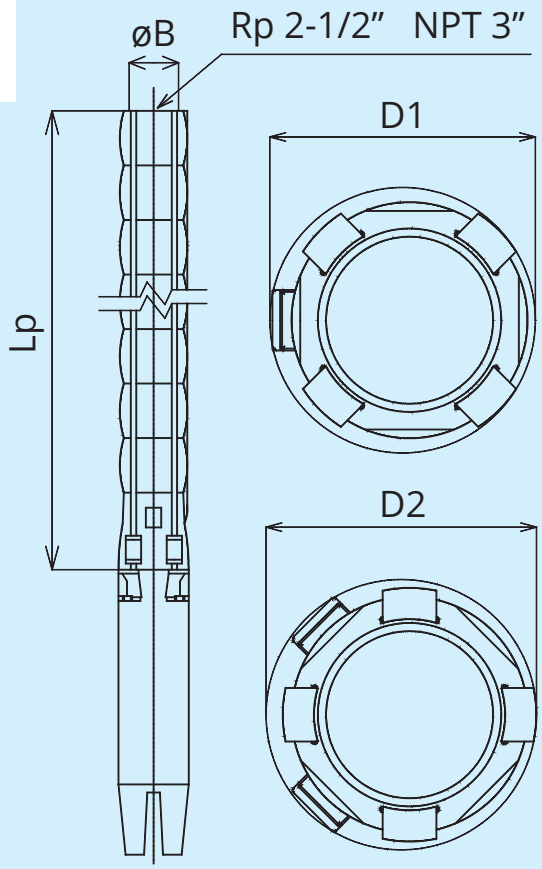

Dimensions and weights

Model	Motor		Dimension (mm)				Net Weight (Kg)
	P2 (Kw)	Dia	Lp	øB	D1	D2	Bare Pump
65AMSUS(N)6-5.55-1	0.55	4"	343	RP 2-1/2" NPT 3"	131		5.0
65AMSUS(N)6-51.1-2	1.1	4"	403		131		6.4
65AMSUS(N)6-52.2-4	2.2	4"	524		131		9.3
65AMSUS(N)6-53.0-5	3.0	4"	585		131		10.8
65AMSUS(N)6-53.7-6	3.7	4"	645		131		12.2
65AMSUS(N)6-54.0-7	4.0	4"	706		131		13.7
65AMSUS(N)6-55.5-10	5.5	4"	887		131		18.0
65AMSUS(N)6-57.5-13	7.5	6"	1069		142	142	22.4
65AMSUS(N)6-59.3-17	9.3	6"	1311		142	142	28.2
65AMSUS(N)6-511-20	11	6"	1492		142	142	32.5
65AMSUS(N)6-513-22	13	6"	1613		142	142	35.4
65AMSUS(N)6-513-24	13	6"	1734		142	142	38.3
65AMSUS(N)6-515-27	15	6"	1916		142	142	42.7
65AMSUS(N)6-518-29	18.5	6"	2037		142	142	45.6
65AMSUS(N)6-518-31	18.5	6"	2158		142	142	48.5
65AMSUS(N)6-518-33	18.5	6"	2279		142	142	51.4
65AMSUS(N)6-522-36	22	6"	2460		142	142	55.7
65AMSUS(N)6-522-38	22	6"	2581		142	142	58.6
65AMSUS(N)6-522-40	22	6"	2702		142	142	61.5

D1 is maximum diameter of pump including of cable guard and one motor cable
D2 is maximum diameter of pump including of cable guard and two motor cable

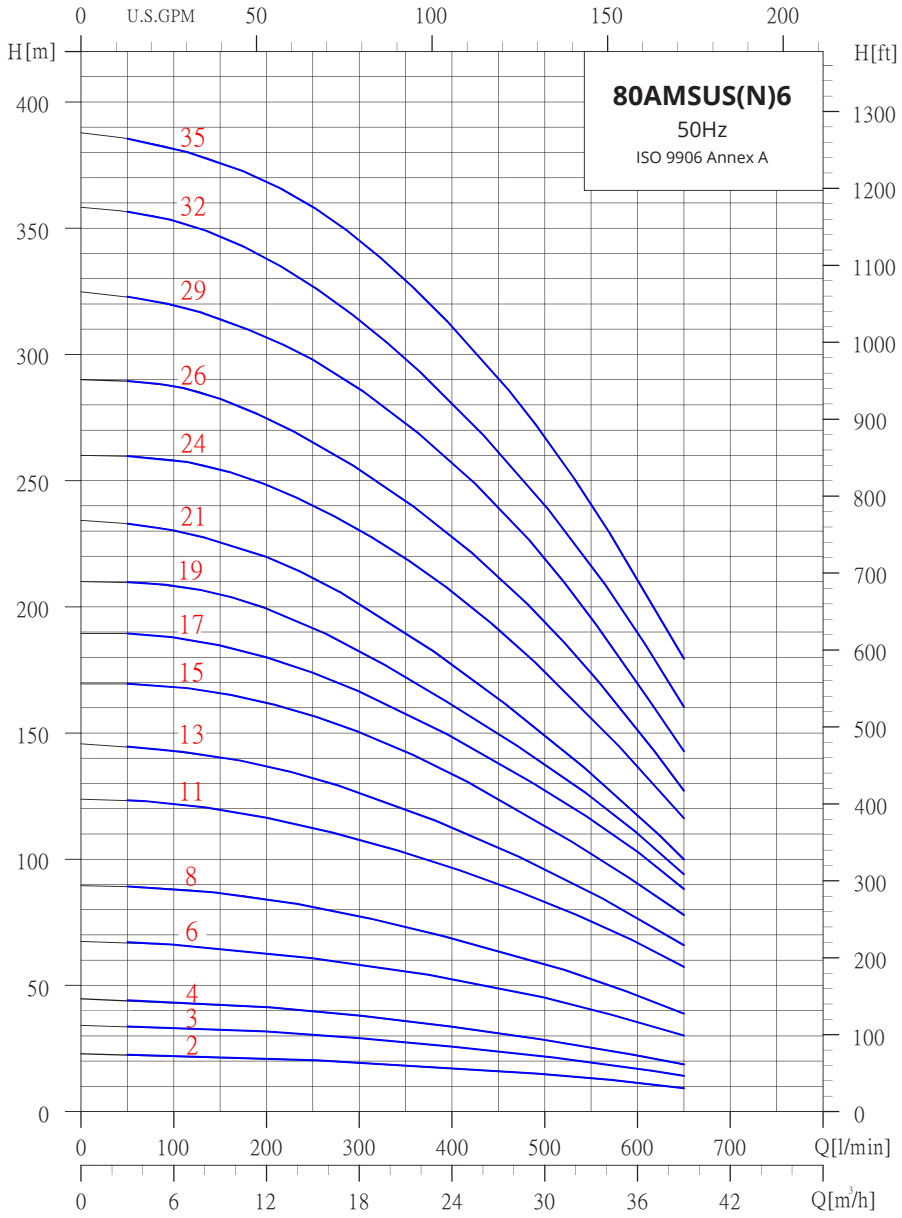

80AMSUS(N)6

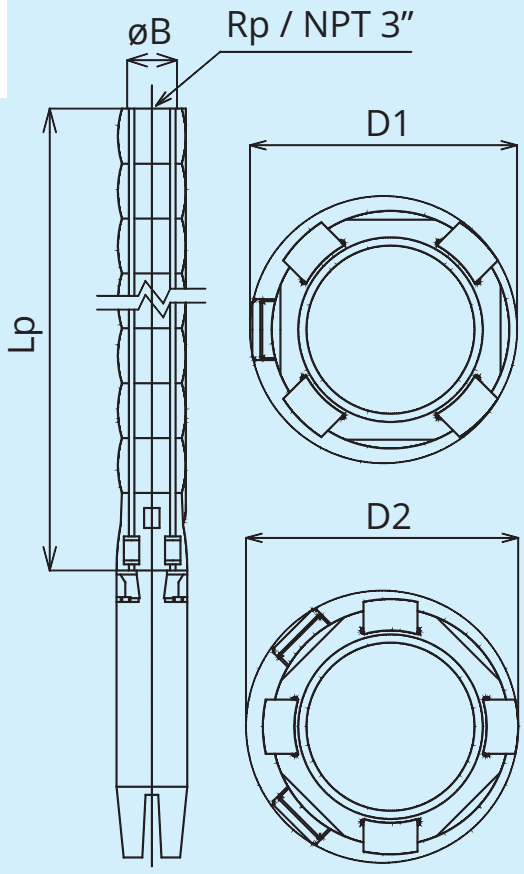

Dimensions and weights

Model	Motor		Dimension (mm)				Net Weight (Kg)
	P2 (Kw)	Dia	Lp	øB	D1	D2	Bare Pump
80AMSUS(N)6-52.2-2	2.2	4"	462	RP/NPT 3"	131		8.4
80AMSUS(N)6-53.0-3	3.0	4"	558		131		10.1
80AMSUS(N)6-53.7-4	3.7	4"	654		131		11.8
80AMSUS(N)6-55.5-6	5.5	4"	846		131		15.2
80AMSUS(N)6-57.5-8	7.5	6"	1038		142	142	18.6
80AMSUS(N)6-511-11	11	6"	1326		142	142	23.6
80AMSUS(N)6-511-13	11	6"	1518		142	142	27.0
80AMSUS(N)6-515-15	15	6"	1710		142	142	30.4
80AMSUS(N)6-515-17	15	6"	1902		142	142	33.8
80AMSUS(N)6-518-19	18.5	6"	2094		142	142	37.2
80AMSUS(N)6-518-21	18.5	6"	2286		142	142	40.6
80AMSUS(N)6-522-24	22	6"	2574		142	142	45.6
80AMSUS(N)6-522-26	22	6"	2766		142	142	49.0
80AMSUS(N)6-526-29	26	6"	3054		142	142	54.1
80AMSUS(N)6-530-32	30	6"	3342		142	142	59.2
80AMSUS(N)6-530-35	30	6"	3630		142	142	64.3

D1 is maximum diameter of pump including of cable guard and one motor cable
D2 is maximum diameter of pump including of cable guard and two motor cable

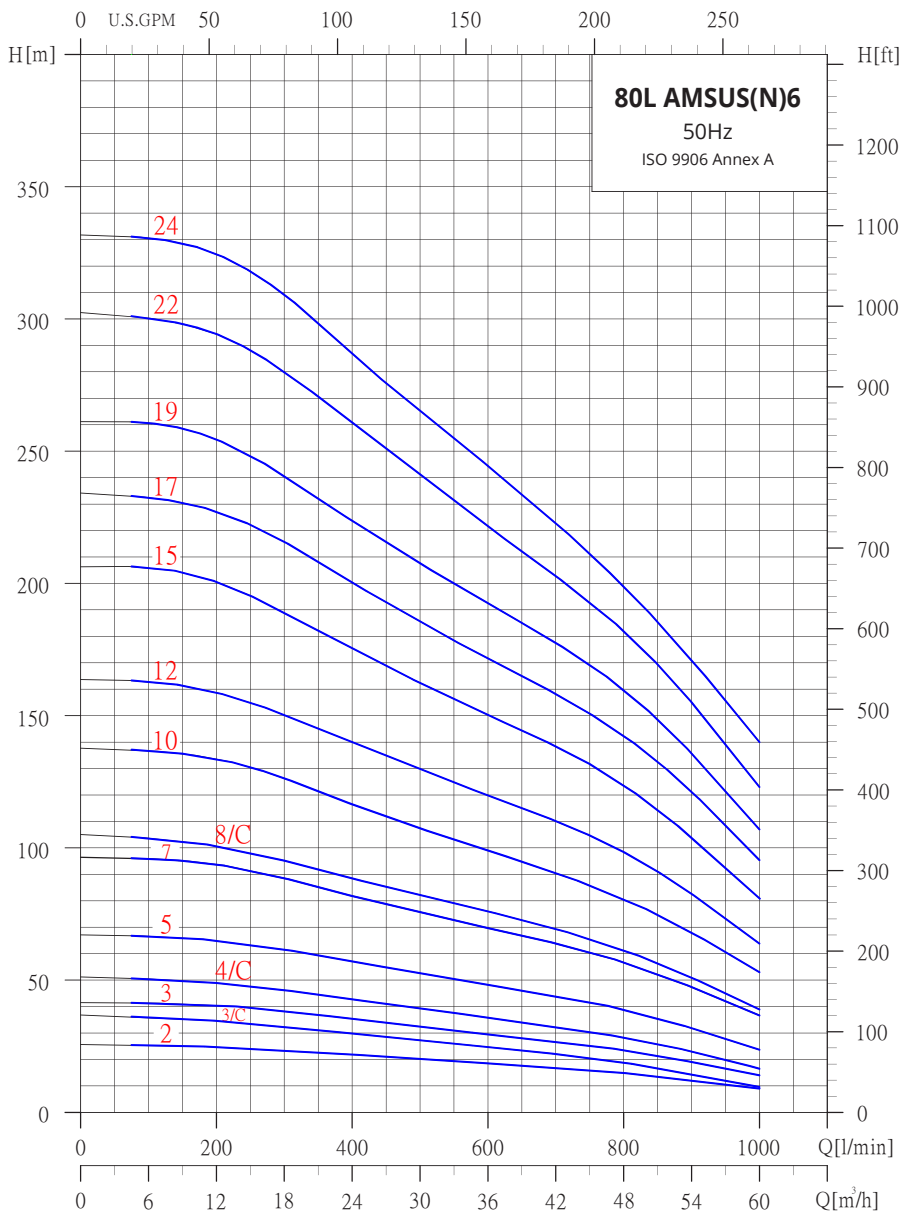

80L AMSUS(N)6

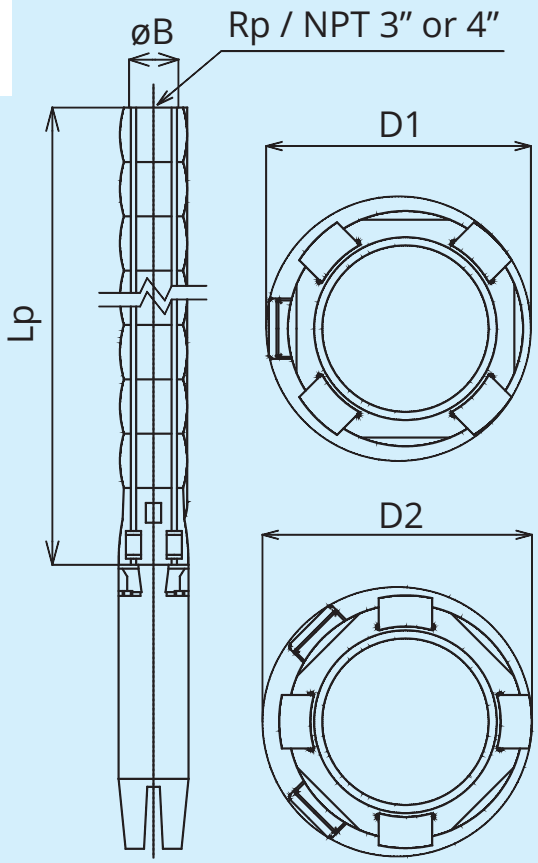

Dimensions and weights

Model	Motor		Dimension (mm)				Net Weight (Kg)
	P2 (Kw)	Dia	Lp	ΦB	D1	D2	Bare Pump
80L AMSUS(N)6-53.0-2	3.0	4"	496	RP/NPT 3" or 4"	146		9.2
80L AMSUS(N)6-53.7-3/C	3.7	4"	609		146		11.5
80L AMSUS(N)6-55.5-3	5.5	4"	609		146		11.5
80L AMSUS(N)6-55.5-4/C	5.5	4"	722		146		13.8
80L AMSUS(N)6-57.5-5	7.5	6"	835		149	152	16.0
80L AMSUS(N)6-511-7	11	6"	1061		149	152	20.6
80L AMSUS(N)6-511-8/C	11	6"	1174		149	152	22.9
80L AMSUS(N)6-515-10	15	6"	1400		149	152	27.4
80L AMSUS(N)6-518-12	18.5	6"	1626		149	152	32.0
80L AMSUS(N)6-522-15	22	6"	1965		149	152	38.8
80L AMSUS(N)6-526-17	26	6"	2191		149	152	43.4
80L AMSUS(N)6-530-19	30	6"	2417		149	152	47.9
80L AMSUS(N)6-537-22	37	6"	2756		149	152	54.8
80L AMSUS(N)6-537-24	37	6"	2982		149	152	59.3

D1 is maximum diameter of pump including of cable guard and one motor cable
D2 is maximum diameter of pump including of cable guard and two motor cable

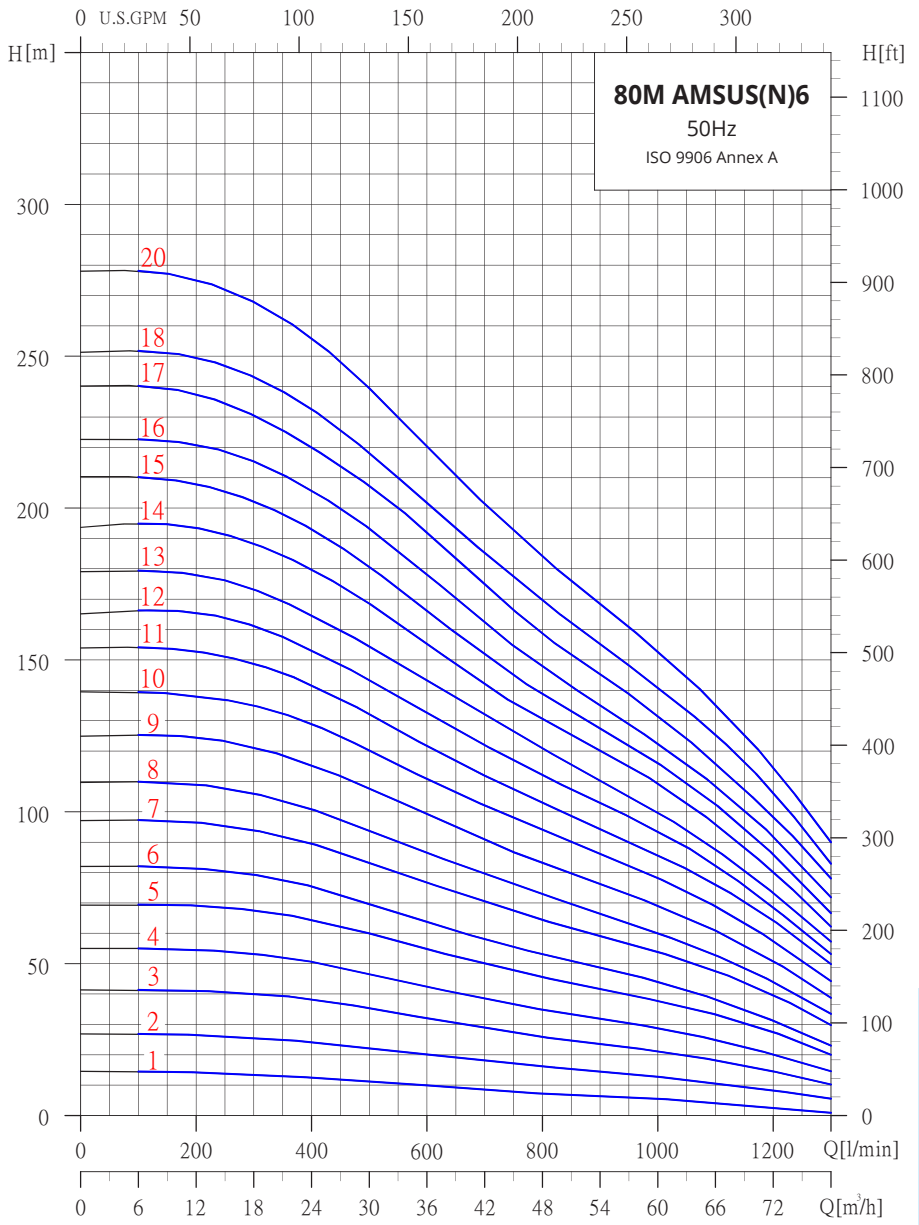

80M AMSUS(N)6

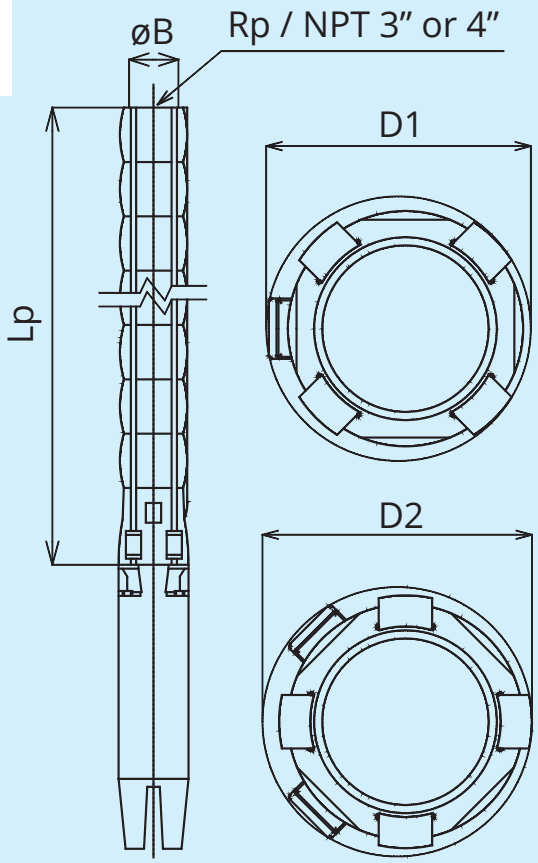

Dimensions and weights

Model	Motor		Dimension (mm)				Net Weight (Kg)
	P2 (Kw)	Dia	Lp	ΦB	D1	D2	Bare Pump
80M AMSUS(N)6-52.2-1	2.2	4"	383	RP/ NPT 3" or 4"	146		6.9
80M AMSUS(N)6-54.0-2	4.0	4"	496		146		9.2
80M AMSUS(N)6-55.5-3	5.5	4"	609		146		11.5
80M AMSUS(N)6-57.5-4	7.5	6"	722		149	152	13.7
80M AMSUS(N)6-59.3-5	9.3	6"	835		149	152	16.0
80M AMSUS(N)6-511-6	11	6"	948		149	152	18.3
80M AMSUS(N)6-513-7	13	6"	1061		149	152	20.6
80M AMSUS(N)6-515-8	15	6"	1174		149	152	22.9
80M AMSUS(N)6-518-9	18.5	6"	1287		149	152	25.1
80M AMSUS(N)6-518-10	18.5	6"	1400		149	152	27.4
80M AMSUS(N)6-522-11	22	6"	1513		149	152	29.7
80M AMSUS(N)6-522-12	22	6"	1626		149	152	32.0
80M AMSUS(N)6-526-13	26	6"	1739		149	152	34.3
80M AMSUS(N)6-526-14	26	6"	1852		149	152	36.5
80M AMSUS(N)6-526-15	26	6"	1965		149	152	38.8
80M AMSUS(N)6-530-16	30	6"	2078		149	152	41.1
80M AMSUS(N)6-537-17	37	6"	2191		149	152	43.4
80M AMSUS(N)6-537-18	37	6"	2304		149	152	45.7
80M AMSUS(N)6-537-20	37	6"	2530		149	152	50.2

D1 is maximum diameter of pump including of cable guard and one motor cable
D2 is maximum diameter of pump including of cable guard and two motor cable

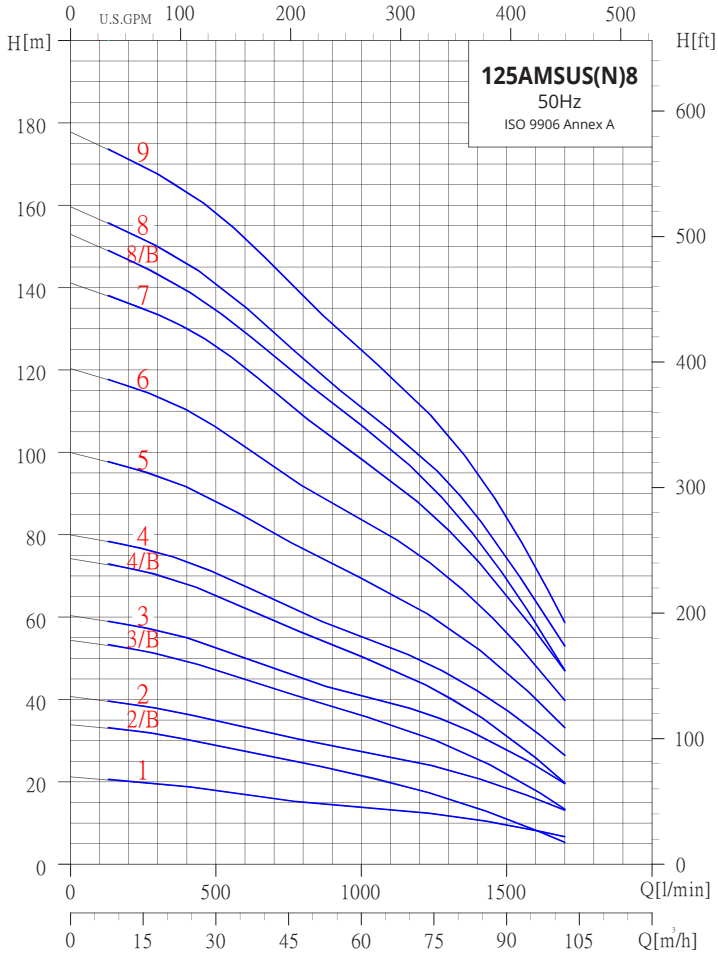

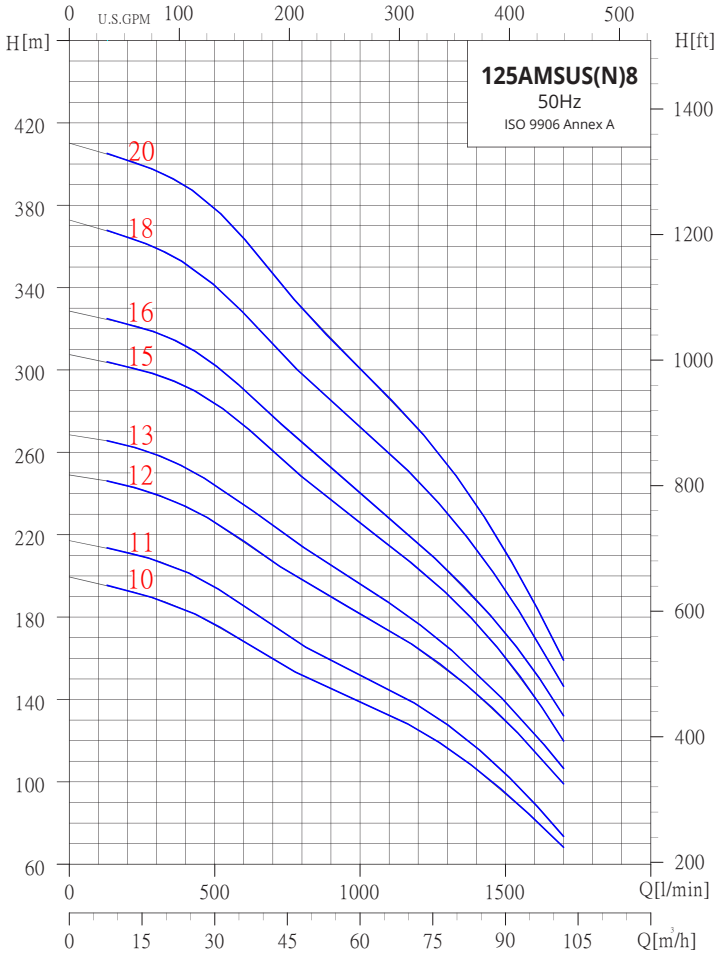

Dimensions and weights

Model	Motor		Dimension (mm)						Net Weight (Kg)
			ΦB connection RP/NPT 5"			ΦB 5" Flange			
	P2 (Kw)	Dia	Lp	D1	D2	Lp	D1	D2	Bare Pump
125AMSUS(N)8-55.5-1	5.5	6"	618	178	186	618	200	200	25.1
125AMSUS(N)8-55.5-2/B	5.5	6"	746	178	186	746	200	200	28.7
125AMSUS(N)8-57.5-2	7.5	6"	746	178	186	746	200	200	28.7
125AMSUS(N)8-59.3-3/B	9.3	6"	874	178	186	874	200	200	32.3
125AMSUS(N)8-511-3	11	6"	874	178	186	874	200	200	32.3
125AMSUS(N)8-513-4/B	13	6"	1003	178	186	1003	200	200	35.9
125AMSUS(N)8-515-4	15	6"	1003	178	186	1003	200	200	35.9
125AMSUS(N)8-518-5	18.5	6"	1131	178	186	1131	200	200	35.9
125AMSUS(N)8-522-6	22	6"	1259	178	186	1259	200	200	43.0
125AMSUS(N)8-526-7	26	6"	1387	178	186	1387	200	200	46.6
125AMSUS(N)8-526-8/B	26	6"	1515	178	186	1515	200	200	50.2
125AMSUS(N)8-530-8	30	6"	1515	178	186	1515	200	200	50.2
125AMSUS(N)8-530-9	30	6"	1644	178	186	1644	200	200	53.8
125AMSUS(N)8-537-10	37	6"	1772	178	186	1772	200	200	57.4
125AMSUS(N)8-537-11	37	6"	1900	178	186	1900	200	200	61.0
125AMSUS(N)8-545-12	45	8"	2039	200	204	2039	209	209	66.0
125AMSUS(N)8-555-13	55	8"	2168	200	204	2168	209	209	69.6
125AMSUS(N)8-555-15	55	8"	2424	200	204				76.8
125AMSUS(N)8-563-16	63	8"	2552	200	204				80.4
125AMSUS(N)8-563-18	63	8"	2809	200	204				87.6
125AMSUS(N)8-575-20	75	8"	3065	200	204				94.8

D1 is maximum diameter of pump including of cable guard and one motor cable
D2 is maximum diameter of pump including of cable guard and two motor cable

125AMSUS(N)8

5" Discharge Flange

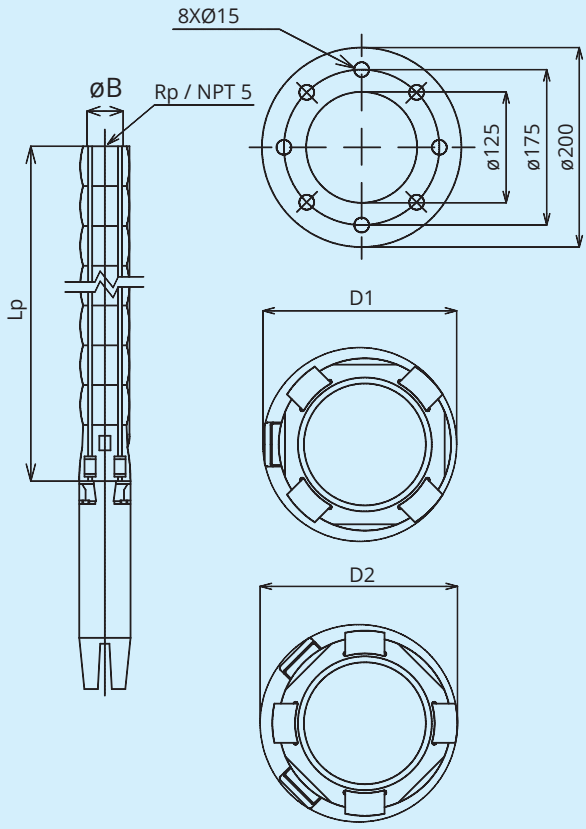

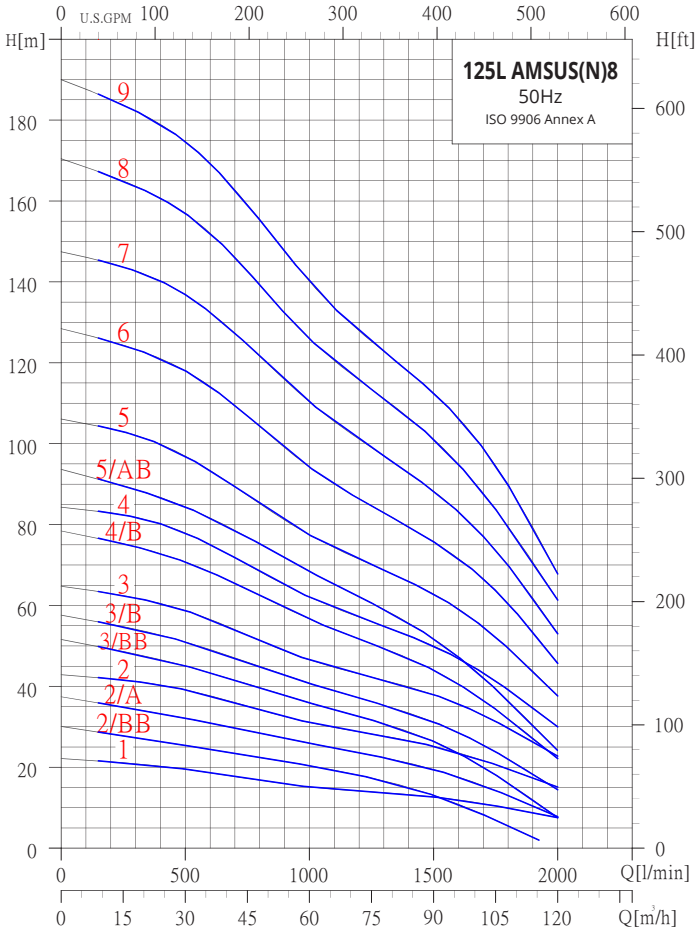

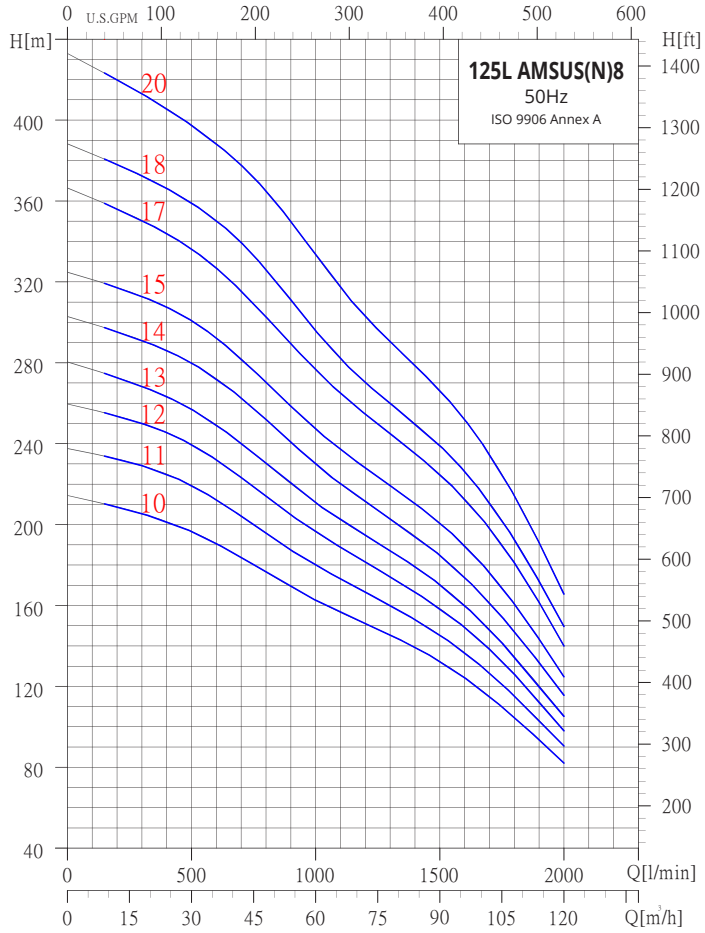

Dimensions and weights

Model	Motor		Dimension (mm)						Net Weight (Kg)
			ΦB connection RP/NPT 5"			ΦB 5" Flange			
	P2 (Kw)	Dia	Lp	D1	D2	Lp	D1	D2	Bare Pump
125L AMSUS(N)8-55.5-1	5.5	6"	618	178	186	618	200	200	25.1
125L AMSUS(N)8-55.5-2/BB	5.5	6"	746	178	186	746	200	200	28.7
125L AMSUS(N)8-57.5-2/A	7.5	6"	746	178	186	746	200	200	28.7
125L AMSUS(N)8-59.3-2	9.3	6"	746	178	186	746	200	200	28.7
125L AMSUS(N)8-59.3-3/BB	9.3	6"	874	178	186	874	200	200	32.3
125L AMSUS(N)8-511-3/B	11	6"	874	178	186	874	200	200	32.3
125L AMSUS(N)8-513-3	13	6"	874	178	186	874	200	200	32.3
125L AMSUS(N)8-515-4/B	15	6"	1003	178	186	1003	200	200	35.9
125L AMSUS(N)8-518-4	18.5	6"	1003	178	186	1003	200	200	35.9
125L AMSUS(N)8-518-5/AB	18.5	6"	1131	178	186	1131	200	200	39.5
125L AMSUS(N)8-522-5	22	6"	1131	178	186	1131	200	200	39.5
125L AMSUS(N)8-526-6	26	6"	1259	178	186	1259	200	200	43.0
125L AMSUS(N)8-530-7	30	6"	1387	178	186	1387	200	200	46.6
125L AMSUS(N)8-537-8	37	6"	1515	178	186	1515	200	200	50.2
125L AMSUS(N)8-537-9	37	6"	1644	178	186	1644	200	200	53.8
125L AMSUS(N)8-545-10	45	8"	1783	196	204	1783	205	205	58.8
125L AMSUS(N)8-555-11	55	8"	1911	196	204	1911	205	205	62.4
125L AMSUS(N)8-555-12	55	8"	2039	196	204	2039	205	205	66.0
125L AMSUS(N)8-555-13	55	8"	2168	196	204	2168	205	205	69.6
125L AMSUS(N)8-563-14	63	8"	2296	196	204	2296	205	205	73.2
125L AMSUS(N)8-575-15	75	8"	2424	196	204				76.7
125L AMSUS(N)8-575-17	75	8"	2680	196	204				84.0
125L AMSUS(N)8-593-18	93	8"	2809	196	204				87.6
125L AMSUS(N)8-593-20	93	8"	3065	196	204				94.8

D1 is maximum diameter of pump including of cable guard and one motor cable
D2 is maximum diameter of pump including of cable guard and two motor cable

125L AMSUS(N)8

5" Discharge Flange

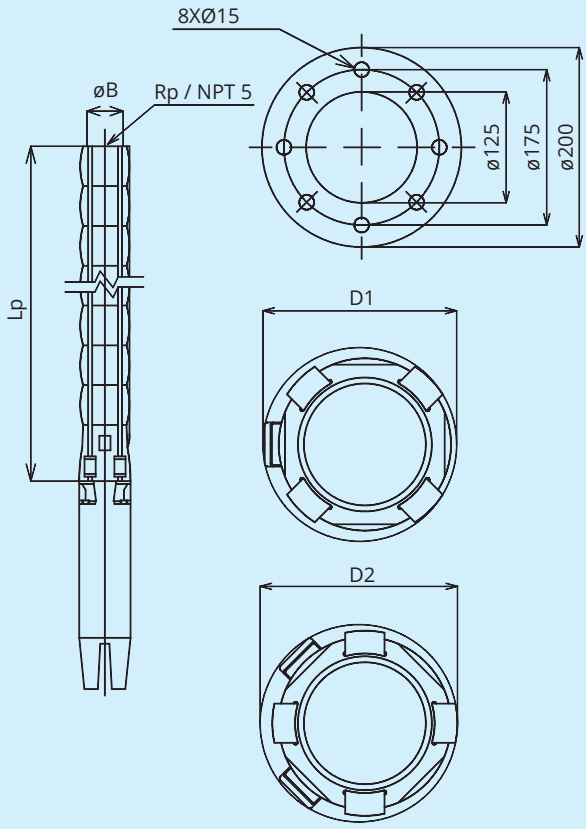

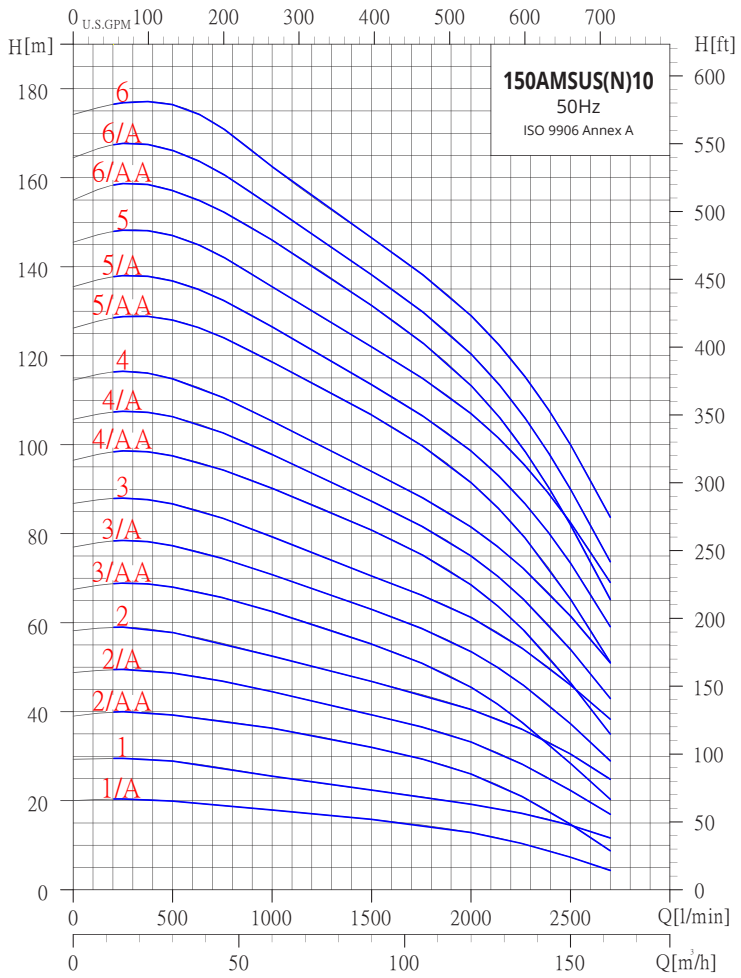

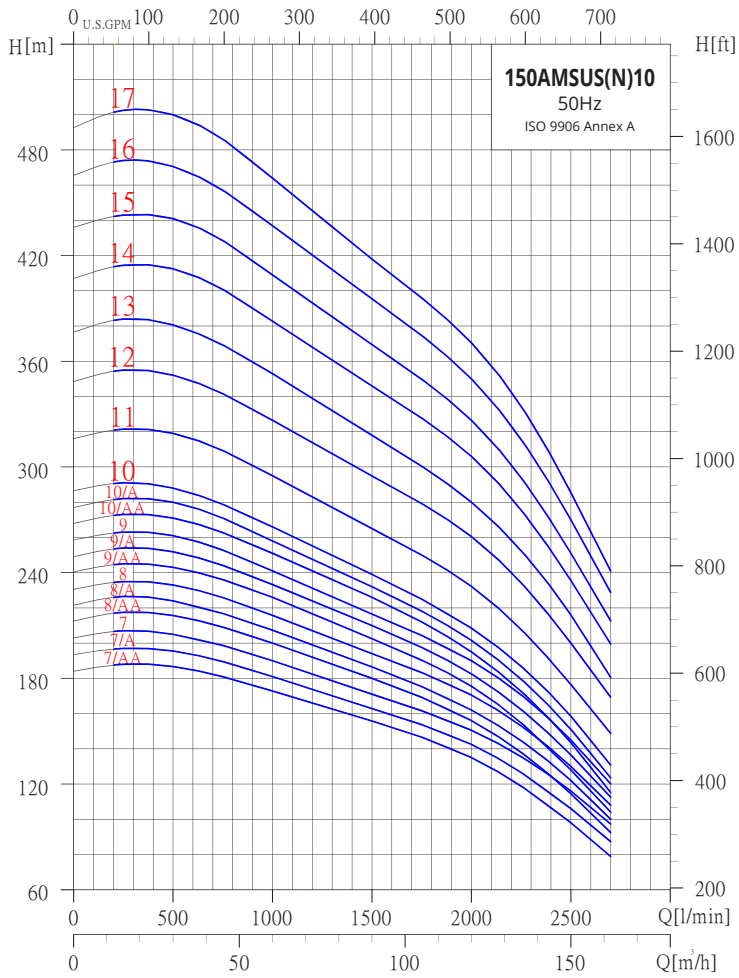

Dimensions and weights

Model	Motor		Dimension (mm)						Net Weight (Kg)
			ΦB connection RP/NPT 6"			ΦB 6" Flange			
	P2 (Kw)	Dia	Lp	D1	D2	Lp	D1	D2	Bare Pump
150AMSUS(N)10-57.5-1/A	7.5	6"	652	211	218	652	222	226	29.2
150AMSUS(N)10-511-1	11	6"	652	211	218	652	222	226	29.3
150AMSUS(N)10-513-2/AA	13	6"	807	211	218	807	222	226	35.6
150AMSUS(N)10-518-2/A	18.5	6"	807	211	218	807	222	226	35.7
150AMSUS(N)10-522-2	22	6"	807	211	218	807	222	226	35.8
150AMSUS(N)10-522-3/AA	22	6"	963	211	218	963	222	226	42.1
150AMSUS(N)10-526-3/A	26	6"	963	211	218	963	222	226	42.2
150AMSUS(N)10-530-3	30	6"	963	211	218	963	222	226	42.3
150AMSUS(N)10-537-4/AA	37	6"	1118	211	218	1118	222	226	48.6
150AMSUS(N)10-537-4/A	37	6"	1118	211	218	1118	222	226	48.7
150AMSUS(N)10-537-4	37	6"	1118	211	218	1118	222	226	48.8
150AMSUS(N)10-545-5/AA	45	8"	1274	213	218	1274	223	226	56.9
150AMSUS(N)10-545-5/A	45	8"	1274	213	218	1274	223	226	57.0
150AMSUS(N)10-555-5	55	8"	1274	213	218	1274	223	226	57.1
150AMSUS(N)10-555-6/AA	55	8"	1429	213	218	1429	223	226	61.9
150AMSUS(N)10-555-6/A	55	8"	1429	213	218	1429	223	226	62.0
150AMSUS(N)10-563-6	63	8"	1429	218	227	1429	229	232	62.1
150AMSUS(N)10-563-7/AA	63	8"	1585	218	227	1585	229	232	66.9
150AMSUS(N)10-563-7/A	63	8"	1585	218	227	1585	229	232	67.0
150AMSUS(N)10-575-7	75	8"	1585	218	227	1585	229	232	67.1
150AMSUS(N)10-575-8/AA	75	8"	1740	218	227				71.9
150AMSUS(N)10-575-8/A	75	8"	1740	218	227				72.0
150AMSUS(N)10-575-8	75	8"	1740	218	227				72.1
150AMSUS(N)10-593-9/AA	93	8"	1896	218	227				76.9
150AMSUS(N)10-593-9/A	93	8"	1896	218	227				77.0
150AMSUS(N)10-593-9	93	8"	1896	218	227				77.1
150AMSUS(N)10-593-10/AA	93	8"	2051	218	227				81.9
150AMSUS(N)10-593-10/A	93	8"	2051	218	227				82.0
150AMSUS(N)10-593-10	93	8"	2051	218	227				82.1
150AMSUS(N)10-5110-11	110	8"	2207	218	227				87.1
150AMSUS(N)10-5132-12	132	10"	2492	227	247				109.5
150AMSUS(N)10-5132-13	132	10"	2648	227	247				116.0
150AMSUS(N)10-5147-14	147	10"	2803	227	247				122.5
150AMSUS(N)10-5147-15	147	10"	2959	227	247				129.0
150AMSUS(N)10-5170-16	170	10"	3114	227	247				135.5
150AMSUS(N)10-5170-17	170	10"	3270	227	247				142.0

D1 is maximum diameter of pump including of cable guard and one motor cable
D2 is maximum diameter of pump including of cable guard and two motor cable

150AMSUS(N)10

6" Discharge Flange

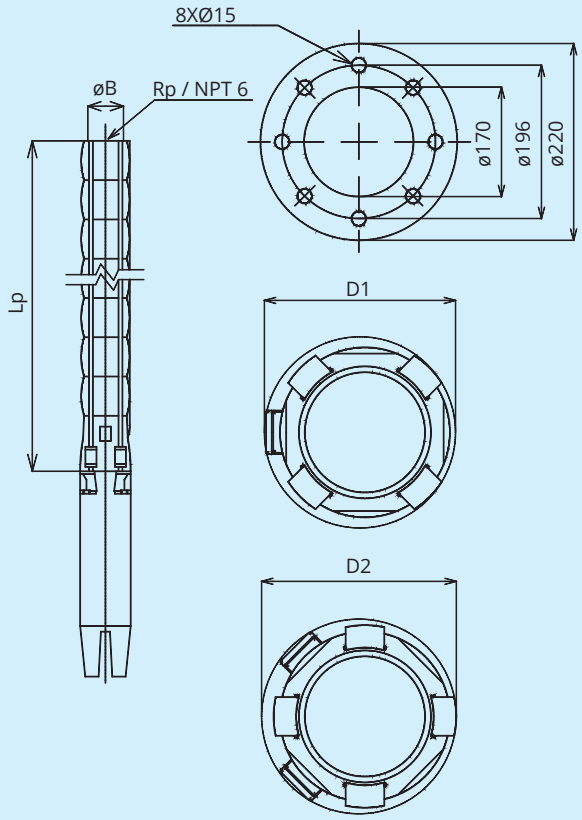

150L AMSUS10, 150L AMSUSN10

50Hz

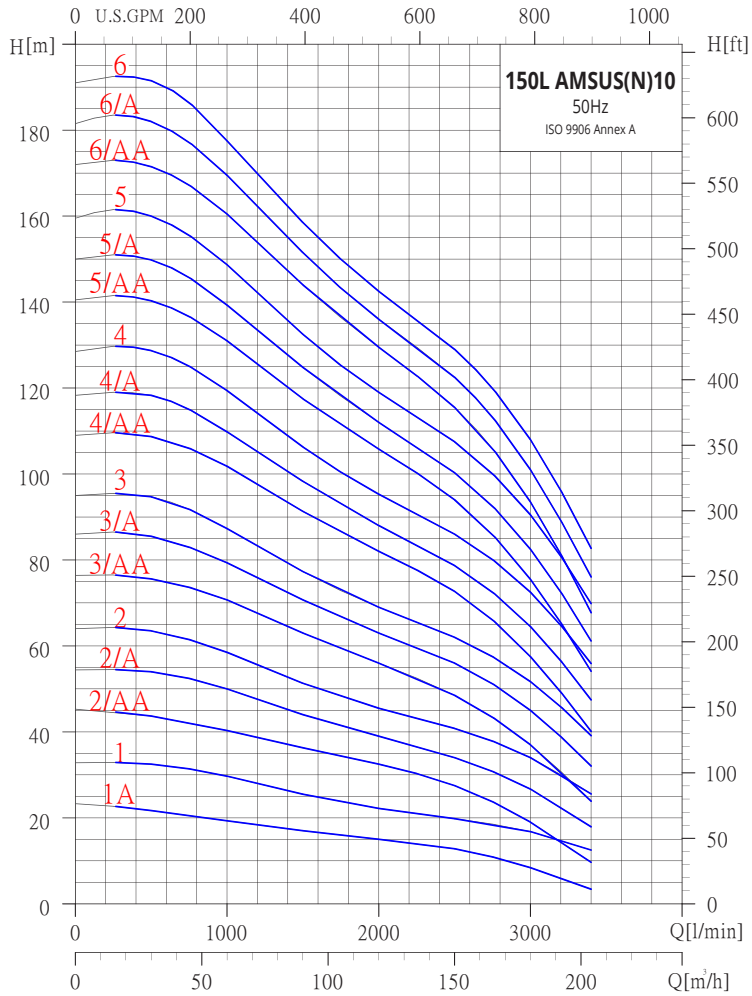

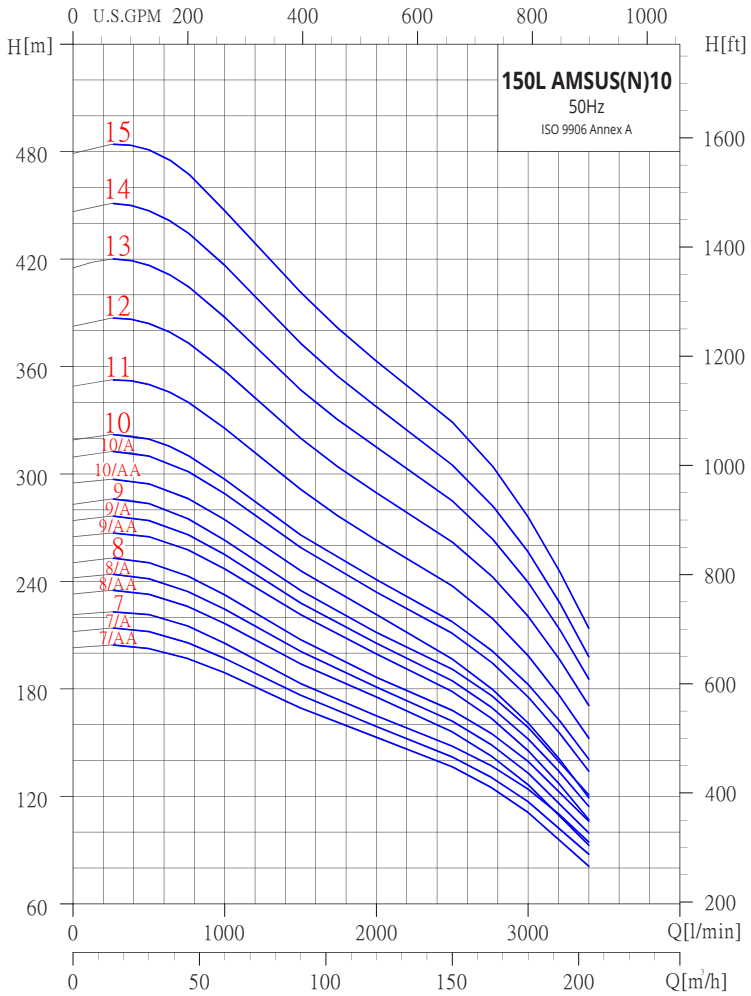

Dimensions and weights

Model	Motor		Dimension (mm)						Net Weight (Kg)
			ΦB connection RP/NPT 6"			ΦB 6" Flange			
	P2 (Kw)	Dia	Lp	D1	D2	Lp	D1	D2	Bare Pump
150L AMSUS(N)10-59.3-1/A	9.3	6"	652	211	218	652	222	226	30.4
150L AMSUS(N)10-513-1	13	6"	652	211	218	652	222	226	30.4
150L AMSUS(N)10-518-2/AA	18.5	6"	807	211	218	807	222	226	36.7
150L AMSUS(N)10-522-2/A	22	6"	807	211	218	807	222	226	36.8
150L AMSUS(N)10-526-2	26	6"	807	211	218	807	222	226	36.8
150L AMSUS(N)10-530-3/AA	30	6"	963	211	218	963	222	226	43.2
150L AMSUS(N)10-537-3/A	37	6"	963	211	218	963	222	226	43.2
150L AMSUS(N)10-537-3	37	6"	963	211	218	963	222	226	43.2
150L AMSUS(N)10-545-4/AA	45	8"	1118	218	227	1118	229	232	50.9
150L AMSUS(N)10-545-4/A	45	8"	1118	218	227	1118	229	232	51.0
150L AMSUS(N)10-555-4	55	8"	1118	218	227	1118	229	232	51.0
150L AMSUS(N)10-555-5/AA	55	8"	1274	218	227	1274	229	232	57.3
150L AMSUS(N)10-555-5/A	55	8"	1274	218	227	1274	229	232	57.4
150L AMSUS(N)10-563-5	63	8"	1274	218	227	1274	229	232	57.4
150L AMSUS(N)10-563-6/AA	63	8"	1429	218	227	1429	229	232	63.7
150L AMSUS(N)10-575-6/A	75	8"	1429	218	227	1429	229	232	63.8
150L AMSUS(N)10-575-6	75	8"	1429	218	227	1429	229	232	63.8
150L AMSUS(N)10-575-7/AA	75	8"	1585	218	227				70.2
150L AMSUS(N)10-593-7/A	93	8"	1585	218	227				70.2
150L AMSUS(N)10-593-7	93	8"	1585	218	227				70.2
150L AMSUS(N)10-593-8/AA	93	8"	1740	218	227				76.6
150L AMSUS(N)10-593-8/A	93	8"	1740	218	227				76.7
150L AMSUS(N)10-593-8	93	8"	1740	218	227				76.7
150L AMSUS(N)10-5110-9/AA	110	8"	1896	218	227				83.0
150L AMSUS(N)10-5110-9/A	110	8"	1896	218	227				83.1
150L AMSUS(N)10-5110-9	110	8"	1896	218	227				83.1
150L AMSUS(N)10-5110-10/AA	110	8"	2051	218	227				89.4
150L AMSUS(N)10-5132-10/A	132	10"	2181	227	247				102.6
150L AMSUS(N)10-5132-10	132	10"	2181	227	247				102.6
150L AMSUS(N)10-5132-11	132	10"	2337	227	247				109.0
150L AMSUS(N)10-5147-12	147	10"	2492	227	247				115.5
150L AMSUS(N)10-5170-13	170	10"	2648	227	247				121.9
150L AMSUS(N)10-5170-14	170	10"	2803	227	247				128.3
150L AMSUS(N)10-5190-15	190	12"							

D1 is maximum diameter of pump including of cable guard and one motor cable
D2 is maximum diameter of pump including of cable guard and two motor cable
Based on 12" motor brand selection, dimensional information of the pump will be provided accordingly

150L AMSUS(N)10

6" Discharge Flange

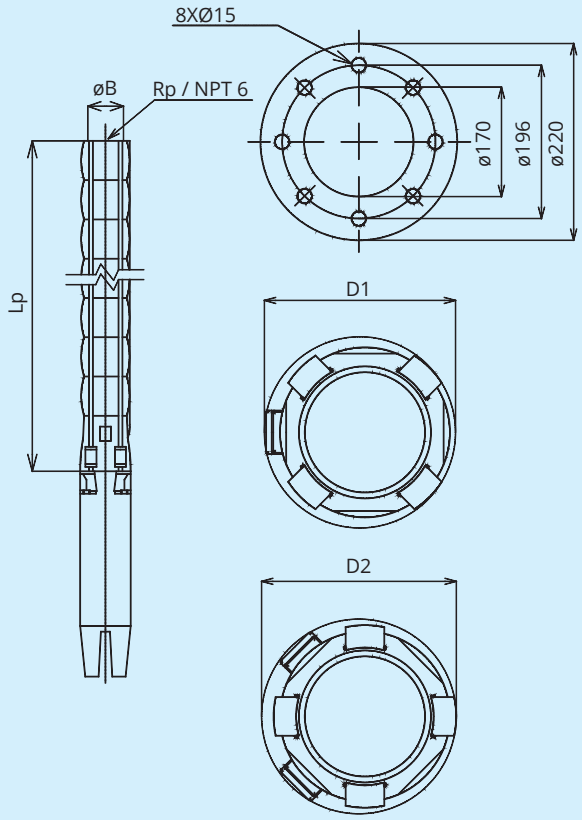

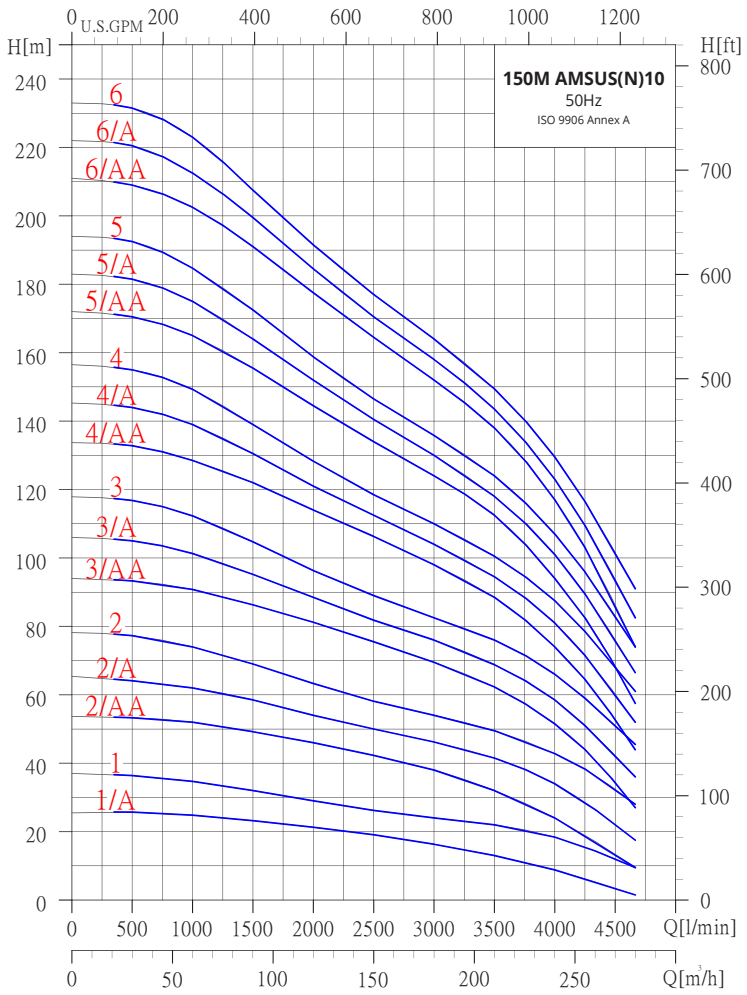

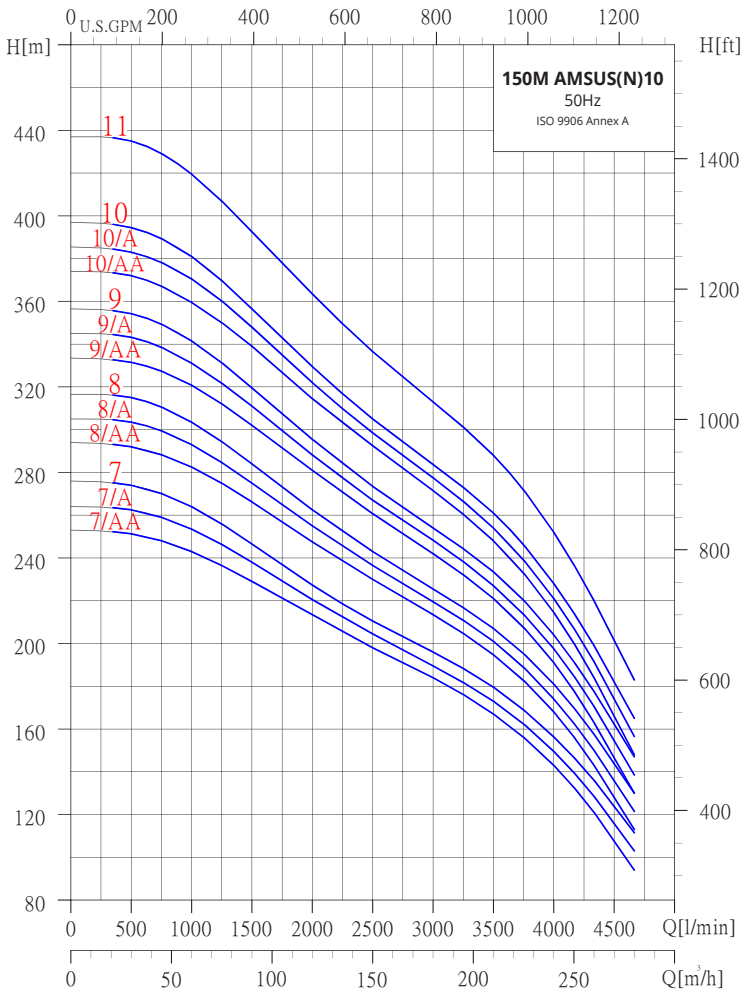

Dimensions and weights

Model	Motor		Dimension (mm) ΦB connection RP/NPT 6"			Net Weight (Kg)
	P2 (Kw)	Dia	Lp	D1	D2	Bare Pump
150M AMSUS(N)10-515-1/A	15	6"	772	237	241	46.1
150M AMSUS(N)10-518-1	18.5	6"	772	237	241	46.1
150M AMSUS(N)10-530-2/AA	30	6"	948	237	241	56.1
150M AMSUS(N)10-537-2/A	37	6"	948	237	241	56.1
150M AMSUS(N)10-545-2	45	8"	948	237	241	55.8
150M AMSUS(N)10-555-3/AA	55	8"	1124	237	241	65.6
150M AMSUS(N)10-555-3/A	55	8"	1124	237	241	65.6
150M AMSUS(N)10-563-3	63	8"	1124	237	241	65.6
150M AMSUS(N)10-575-4/AA	75	8"	1300	237	241	75.4
150M AMSUS(N)10-575-4/A	75	8"	1300	237	241	75.4
150M AMSUS(N)10-575-4	75	8"	1300	237	241	75.4
150M AMSUS(N)10-593-5/AA	93	8"	1476	237	241	85.8
150M AMSUS(N)10-593-5/A	93	8"	1476	237	241	85.8
150M AMSUS(N)10-593-5	93	8"	1476	237	241	85.8
150M AMSUS(N)10-5110-6/AA	110	8"	1652	237	241	96.2
150M AMSUS(N)10-5110-6/A	110	8"	1652	237	241	96.2
150M AMSUS(N)10-5110-6	110	8"	1652	237	241	96.2
150M AMSUS(N)10-5132-7/AA	132	10"	1828	262	274	111.2
150M AMSUS(N)10-5132-7/A	132	10"	1828	262	274	111.2
150M AMSUS(N)10-5132-7	132	10"	1828	262	274	111.2
150M AMSUS(N)10-5147-8/AA	147	10"	2004	262	274	121.5
150M AMSUS(N)10-5147-8/A	147	10"	2004	262	274	121.5
150M AMSUS(N)10-5147-8	147	10"	2004	262	274	121.5
150M AMSUS(N)10-5170-9/AA	170	10"	2180	262	274	131.7
150M AMSUS(N)10-5170-9/A	170	10"	2180	262	274	131.7
150M AMSUS(N)10-5170-9	170	10"	2180	262	274	131.7
150M AMSUS(N)10-5190-10/AA	190	12"				
150M AMSUS(N)10-5190-10/A	190	12"				
150M AMSUS(N)10-5190-10	190	12"				
150M AMSUS(N)10-5220-11	220	12"				

D1 is maximum diameter of pump including of cable guard and one motor cable
D2 is maximum diameter of pump including of cable guard and two motor cable
Based on 12" motor brand selection, dimensional information of the pump will be provided accordingly

150M AMSUS(N)10

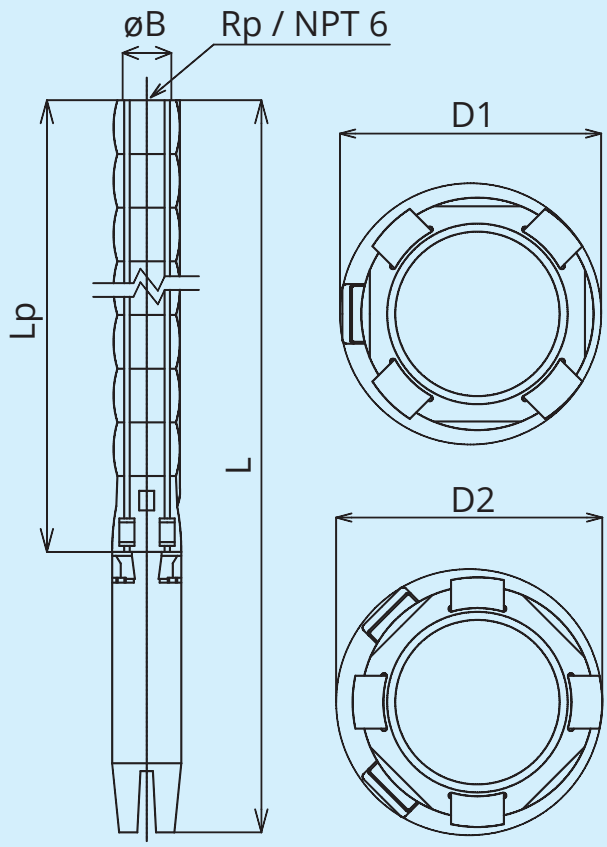

32 / 32L / 32M / 40 AMSUS(N)4

No.	Parts Description	Materials	AMSUS	AMSUSN
			Standard	
1	Discharge Casing	Stainless Steel	SUS304	SUS316
2	Bearing		NBR	
3	Impeller	Stainless Steel	SUS304	SUS316
6	Neck Ring	Stainless Steel+NBR	SUS304	SUS316
7	Chamber	Stainless Steel	SUS304	SUS316
10	Strainer	Stainless Steel	SUS304	SUS316
11	Suction Interconnector	Stainless Steel	SUS304	SUS316
12	Pump Shaft	Stainless Steel	SUS431	SUS431
13	Cable Guard	Stainless Steel	SUS304	SUS316
14	Strap	Stainless Steel	SUS304	SUS316
16	Lower Valve Seat Retainer	Stainless Steel	SUS304	SUS316
17	Valve Cup	Stainless Steel	SUS304	SUS316
21	Spacing Washer for Stop Ring	Stainless Steel	SUS304	SUS316
23	Coupling	Stainless Steel	SUS304	SUS316
24	Valve Seat		NBR	
36	Valve Guide	Stainless Steel	SUS304	SUS316
37	Lock Nut	Stainless Steel	SUS304	SUS316
38	Shaft Sleeve	Stainless Steel	SUS304	SUS316
39	Screw	Stainless Steel	SUS304	SUS316
40	Washer	Stainless Steel	SUS304	SUS316
42	Top Shaft Bush Guide		NBR	

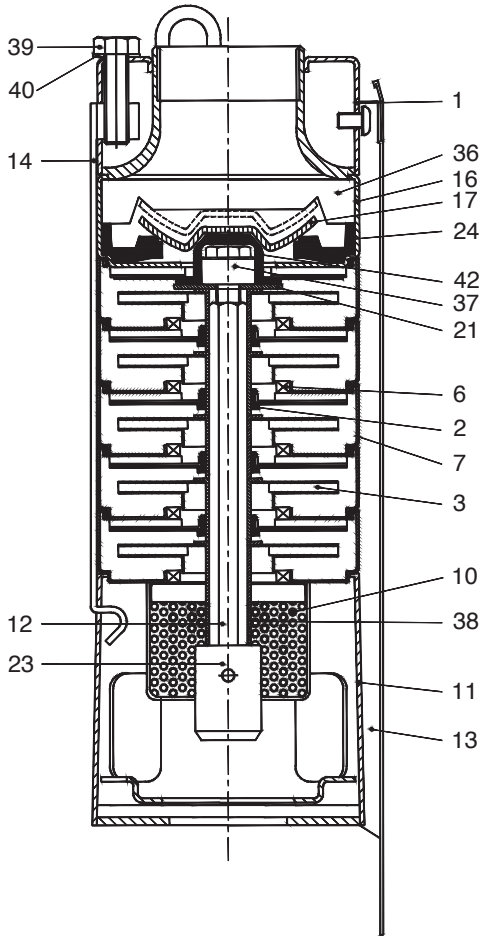

50AMSUS(N)4

No.	Parts Description	Materials	AMSUS	AMSUSN
			Standard	
1	Discharge Casing	Stainless Steel	SUS304	SUS316
2	Bearing		NBR	
3	Impeller	Stainless Steel	SUS304	SUS316
4	Split Cone Nut	Stainless Steel	SUS304	SUS316
5	Split Cone	Stainless Steel	SUS304	SUS316
6	Neck Ring	Stainless Steel+NBR	SUS304	SUS316
7	Chamber	Stainless Steel	SUS304	SUS316
10	Strainer	Stainless Steel	SUS304	SUS316
11	Suction Interconnector	Stainless Steel	SUS304	SUS316
12	Pump Shaft	Stainless Steel	SUS431	SUS431
13	Cable Guard	Stainless Steel	SUS304	SUS316
14	Strap	Stainless Steel	SUS304	SUS316
15	Nut	Stainless Steel	SUS304	SUS316
17	Valve Cup	Stainless Steel	SUS304	SUS316
22	Bottom Chamber	Stainless Steel	SUS304	SUS316
23	Coupling	Stainless Steel	SUS304	SUS316
24	Valve Seat		NBR	
41	Bearing Spider	Stainless Steel	SUS304	SUS316

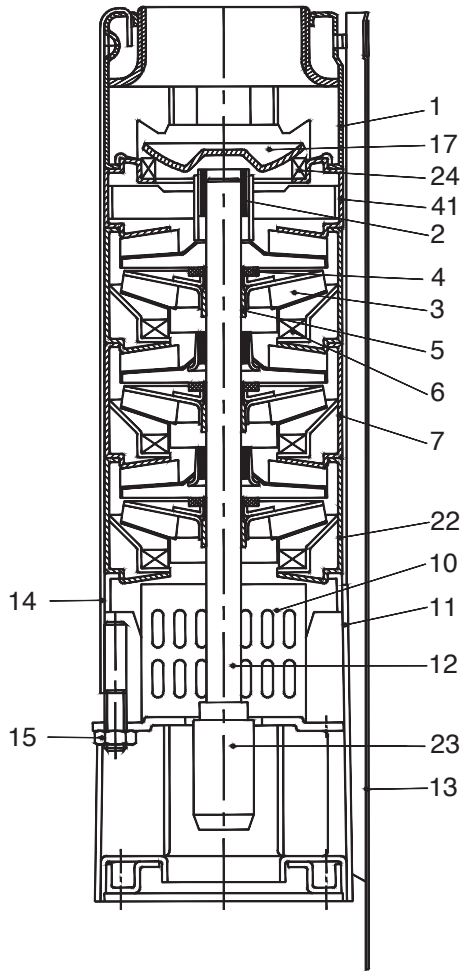

50L AMSUS(N)4

No.	Parts Description	Materials	AMSUS	AMSUSN
			Standard	
1	Discharge Casing	Stainless Steel	SUS304	SUS316
2	Bearing		NBR	
3	Impeller	Stainless Steel	SUS304	SUS316
4	Split Cone Nut	Stainless Steel	SUS304	SUS316
5	Split Cone	Stainless Steel	SUS304	SUS316
6	Neck Ring	Stainless Steel + NBR	SUS304	SUS316
7	Chamber	Stainless Steel	SUS304	SUS316
8	Stop Ring		Carbon/Graphite/PTFE	
9	Neck Ring Retainer	Stainless Steel	SUS304	SUS316
10	Strainer	Stainless Steel	SUS304	SUS316
11	Suction Interconnector	Stainless Steel	SUS304	SUS316
12	Pump Shaft	Stainless Steel	SUS431	SUS431
13	Cable Guard	Stainless Steel	SUS304	SUS316
14	Strap	Stainless Steel	SUS304	SUS316
15	Nut	Stainless Steel	SUS304	SUS316
23	Coupling	Stainless Steel	SUS304	SUS316

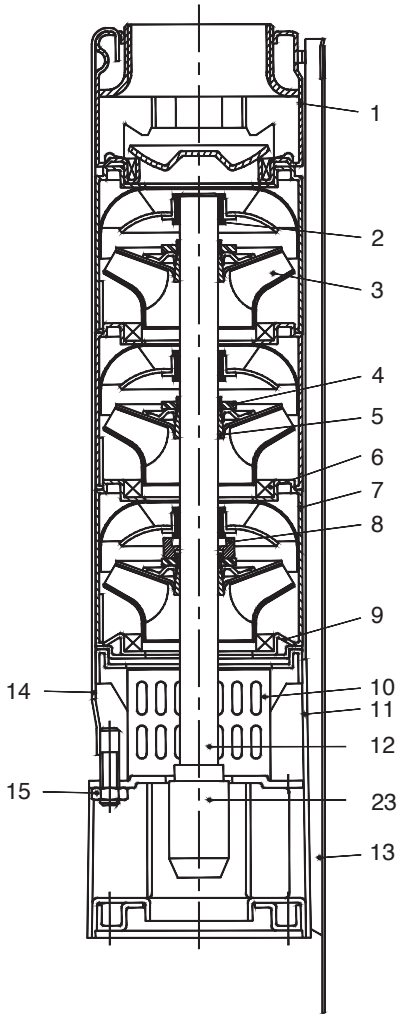

65AMSUS(N)6

No.	Parts Description	Materials	AMSUS	AMSUSN
			Standard	
1	Discharge Casing	Stainless Steel	SUS304	SUS316
2	Bearing		NBR	
3	Impeller	Stainless Steel	SUS304	SUS316
4	Split Cone Nut	Stainless Steel	SUS304	SUS316
5	Split Cone	Stainless Steel	SUS304	SUS316
6	Neck Ring	Stainless Steel + NBR	SUS304	SUS316
7	Chamber	Stainless Steel	SUS304	SUS316
9	Neck Ring Retainer	Stainless Steel	SUS304	SUS316
10	Strainer	Stainless Steel	SUS304	SUS316
11*	Suction Interconnector	Stainless Steel	SUS304	SUS316
12	Pump Shaft	Stainless Steel	SUS431	SUS431
13	Cable Guard	Stainless Steel	SUS304	SUS316
14	Strap	Stainless Steel	SUS304	SUS316
15	Nut	Stainless Steel	SUS304	SUS316
17	Valve Cup	Stainless Steel	SUS304	SUS316
19	Ring of Impeller	Stainless Steel	SUS304	SUS316
21	Spacing Washer for Stop Ring		Carbon / Graphite / PTFE	
23	Coupling	Stainless Steel	SUS304	SUS316
24	Valve Seat	Stainless Steel + NBR	SUS304	SUS316
26	Screw	Stainless Steel	SUS304	SUS316
27	Key	Stainless Steel	SUS304	SUS316
28	O-ring		NBR	
32	Top Chamber	Stainless Steel	SUS304	SUS316

11 Standard is Press Stainless Steel. Optional Cast Stainless Steel is available*

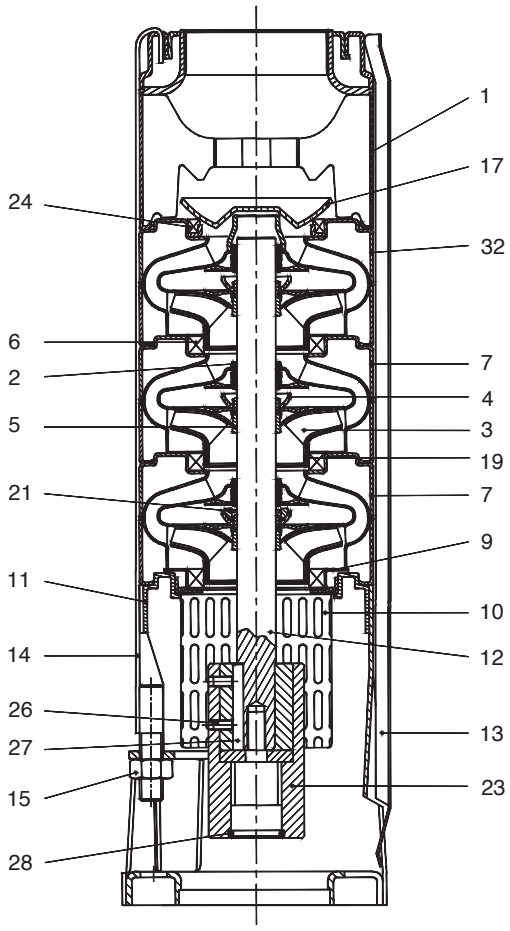

80AMSUS(N)6

No.	Parts Description	Materials	AMSUS	AMSUSN
			Standard	
1	Discharge Casing	Stainless Steel	SUS304	SUS316
2	Bearing		NBR	
3	Impeller	Stainless Steel	SUS304	SUS316
4	Split Cone Nut	Stainless Steel	SUS304	SUS316
5	Split Cone	Stainless Steel	SUS304	SUS316
6	Neck Ring	Stainless Steel + NBR	SUS304	SUS316
7	Chamber	Stainless Steel	SUS304	SUS316
8	Stop Ring	Stainless Steel	SUS304	SUS316
9	Neck Ring Retainer	Stainless Steel	SUS304	SUS316
10	Strainer	Stainless Steel	SUS304	SUS316
11*	Suction Interconnector	Stainless Steel	SUS304	SUS316
12	Pump Shaft	Stainless Steel	SUS431	SUS431
13	Cable Guard	Stainless Steel	SUS304	SUS316
14	Strap	Stainless Steel	SUS304	SUS316
15	Nut	Stainless Steel	SUS304	SUS316
17	Valve Cup	Stainless Steel	SUS304	SUS316
19	Ring of Impeller	Stainless Steel	SUS304	SUS316
21	Spacing Washer for Stop Ring		Carbon / Graphite / PTFE	
22	Bottom Chamber	Stainless Steel	SUS304	SUS316
23	Coupling	Stainless Steel	SUS304	SUS316
24	Valve Seat	Stainless Steel + NBR	SUS304	SUS316
25	Bearing	Stainless Steel + NBR	SUS304	SUS316
26	Screw	Stainless Steel	SUS304	SUS316
27	Key	Stainless Steel	SUS304	SUS316
32	Top Chamber	Stainless Steel	SUS304	SUS316
33	Chamber Bearing Cap	Stainless Steel	SUS304	SUS316

11 Standard is Press Stainless Steel. Optional Cast Stainless Steel is available*

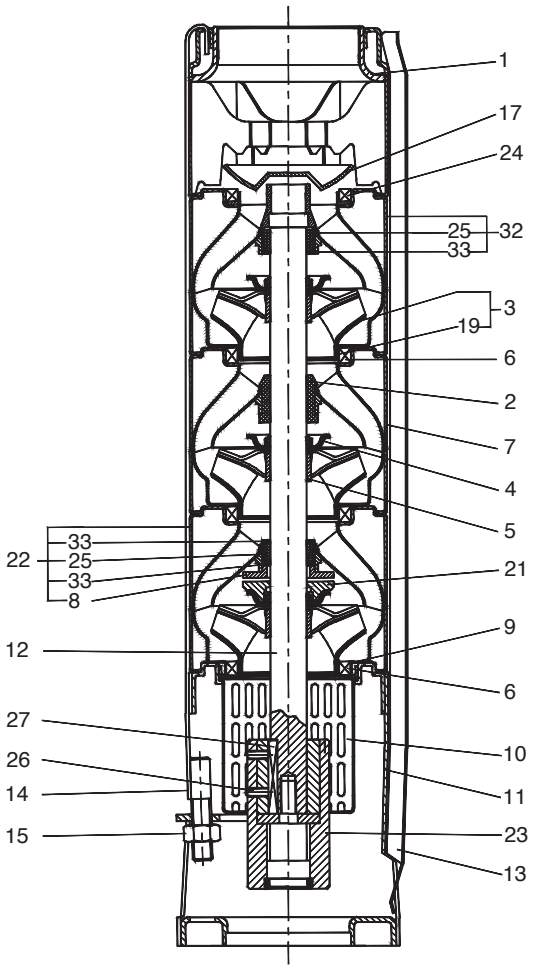

80L / 80M AMSUS(N)6

No.	Parts Description	Materials	AMSUS	AMSUSN
			Standard	
1	Discharge Casing	Stainless Steel	SUS304	SUS316
2	Bearing		NBR	
3	Impeller	Stainless Steel	SUS304	SUS316
4	Split Cone Nut	Stainless Steel	SUS304	SUS316
5	Split Cone	Stainless Steel	SUS304	SUS316
6	Neck Ring	Stainless Steel + NBR	SUS304	SUS316
7	Chamber	Stainless Steel	SUS304	SUS316
8	Stop Ring	Stainless Steel	SUS304	SUS316
10	Strainer	Stainless Steel	SUS304	SUS316
11*	Suction Interconnector	Stainless Steel	SUS304	SUS316
12	Pump Shaft	Stainless Steel	SUS431	SUS431
13	Cable Guard	Stainless Steel	SUS304	SUS316
14	Strap	Stainless Steel	SUS304	SUS316
15	Nut	Stainless Steel	SUS304	SUS316
17	Valve Cup	Stainless Steel	SUS304	SUS316
19	Ring of Impeller	Stainless Steel	SUS304	SUS316
20	Nut for Stop Ring	Stainless Steel	SUS304	SUS316
21	Spacing Washer for Stop Ring		Carbon / Graphite / PTFE	
22	Bottom Chamber	Stainless Steel	SUS304	SUS316
23	Coupling	Stainless Steel	SUS304	SUS316
24	Valve Seat	Stainless Steel + NBR	SUS304	SUS316
25	Bearing	Stainless Steel + NBR	SUS304	SUS316
26	Screw	Stainless Steel	SUS304	SUS316
27	Key	Stainless Steel	SUS304	SUS316
32	Top Chamber	Stainless Steel	SUS304	SUS316
33	Chamber Bearing Cap	Stainless Steel	SUS304	SUS316
34	Bottom Neck Ring		Carbon + PTFE	
35	Strain Cap	Stainless Steel	SUS304	SUS316

11 Standard is Press Stainless Steel. Optional Cast Stainless Steel is available*

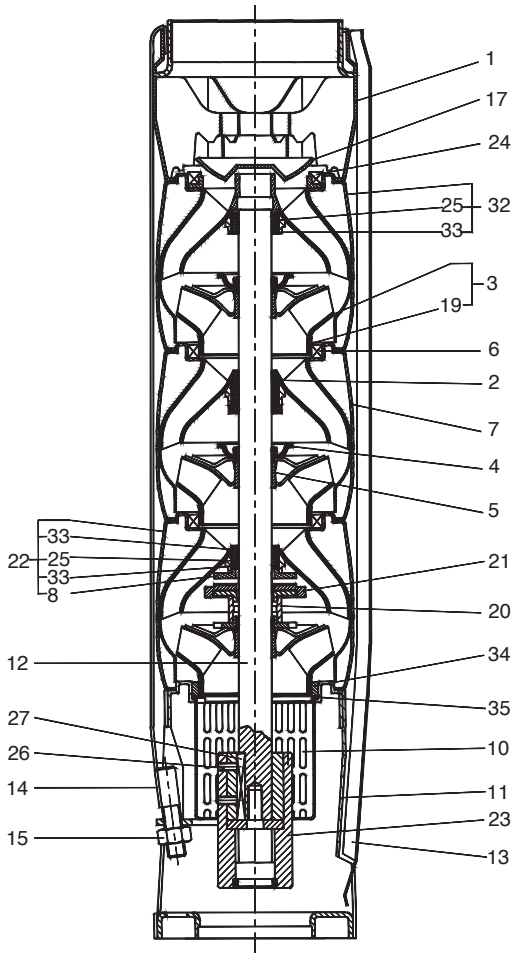

125 / 125L AMSUS(N)8

No.	Parts Description	Materials	AMSUS	AMSUSN
			Standard	
1	Discharge Casing	Stainless Steel	SCS13	SCS14
2	Bearing		NBR	
3	Impeller	Stainless Steel	SUS304	SUS316
4	Split Cone Nut	Stainless Steel	SCS13	SCS14
5	Split Cone	Stainless Steel	SUS304	SUS316
6	Neck Ring	Stainless Steel + NBR	SUS304	SUS316
7	Chamber	Stainless Steel	SUS304	SUS316
8	Stop Ring	Stainless Steel	SUS304	SUS316
10	Strainer	Stainless Steel	SUS304	SUS316
11	Suction Interconnector	Stainless Steel	SCS13	SCS14
12	Pump Shaft	Stainless Steel	SUS431	SUS431
13	Cable Guard	Stainless Steel	SUS304	SUS316
14	Strap	Stainless Steel	SUS304	SUS316
15	Nut	Stainless Steel	SUS304	SUS316
16	Lower Valve Seat Retainer	Stainless Steel	SCS13	SCS14
17	Valve Cup	Stainless Steel	SUS304	SUS316
18	Upper Valve Seat Retainer	Stainless Steel	SUS304	SUS316
19	Ring of Impeller	Stainless Steel	SUS304	SUS316
20	Nut For Stop Ring	Stainless Steel	SUS304	SUS316
21	Spacing Washer for Stop Ring		Carbon / Graphite / PTFE	
22	Bottom Chamber	Stainless Steel	SUS304	SUS316
23	Coupling	Stainless Steel	SCS13	SCS14
24	Valve Seat		NBR	
25	Bearing	Stainless Steel	SUS304	SUS316
26	Screw	Stainless Steel	SUS304	SUS316
27	Key	Stainless Steel	SUS304	SUS316
28	O-ring		NBR	
29	O-ring		NBR	
30	Spring	Stainless Steel	SUS304	SUS316
31	Spring Washer	Stainless Steel	SUS304	SUS316

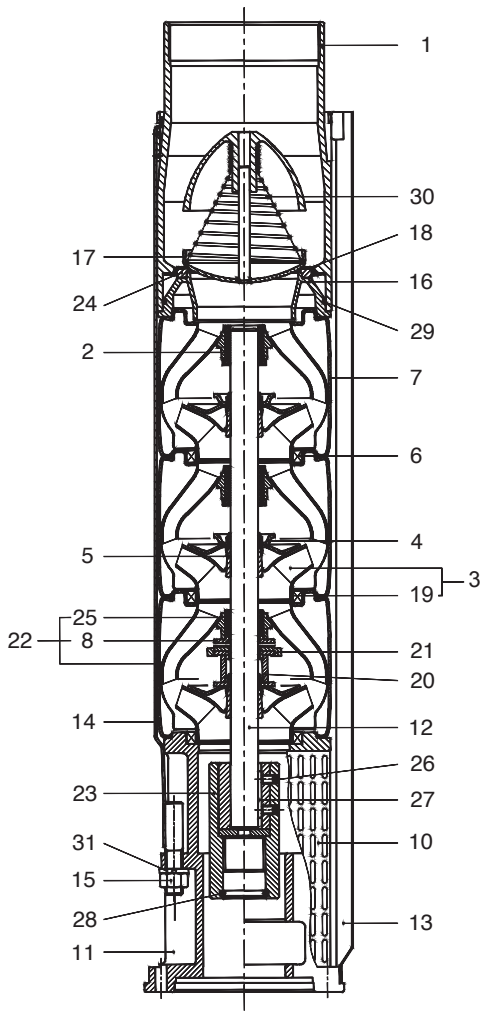

150 / 150L / 150M AMSUS(N)10

No.	Parts Description	Materials	AMSUS	AMSUSN
			Standard	
1	Discharge Casing	Stainless Steel	SCS13	SCS14
2	Bearing		NBR 70	
3	Impeller	Stainless Steel	SUS304	SUS316
4	Split Cone Nut	Stainless Steel	SCS13	SCS14
5	Split Cone	Stainless Steel	SUS304	SUS316
6	Neck Ring		PPS + NBR	
7	Chamber	Stainless Steel	SUS304	SUS316
10	Strainer - one or two leads	Stainless Steel	SUS304	SUS316
11	Suction Interconnector	Stainless Steel	SCS13	SCS14
12	Pump Shaft	Stainless Steel	SUS431	SUS431
13	Cable Guard	Stainless Steel	SUS304	SUS316
14	Strap	Stainless Steel	SUS304	SUS316
15	Nut	Stainless Steel	SUS304	SUS316
16	Lower Valve Seat Retainer	Stainless Steel	SCS13	SCS14
17	Valve Cup	Stainless Steel	SUS304	SUS316
18	Upper Valve Seat Retainer	Stainless Steel	SUS304	SUS316
19	Ring of Impeller	Stainless Steel	SUS304	SUS316
21	Spacing Washer for Stop Ring		Carbon Fiber + MoS2 + PTFE	
23	Coupling	Stainless Steel	SCS13	SCS14
24	Valve Seat		NBR 70	
25	Bearing	Stainless Steel + NBR	SUS304	SUS316
26	Screw	Stainless Steel	SUS304	SUS316
27	Key	Stainless Steel	SUS304	SUS316
28	O-ring		NBR 70	
29	O-ring		NBR 70	
30	Spring	Stainless Steel	SUS304	SUS316
31	Spring Washer	Stainless Steel	SUS304	SUS316
32	Upper Chamber	Stainless Steel	SUS304	SUS316

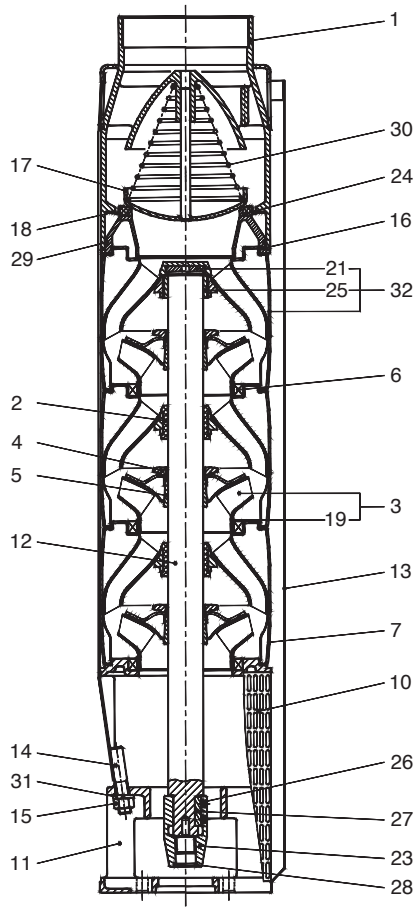

Motor	Type		4" non-toxic oil filled submersible motor
	Max. depth		200M
	Mounting flange		4" NEMA standard
	Insulation		F Class
	Enclosure class		IP 68
	Main connection 3~[V/Hz] (Permissible voltage tolerance ±10%)		230V or 400V · 50Hz
	Material	Frame	SUS304
		Mechanical seal	Ceremic/ Carbon
		Main shaft	SUS630 (≥3.0kW) / SUS304 (≤2.2kW)
		Cable	TPE / PE

Specification is subjected to change without notice

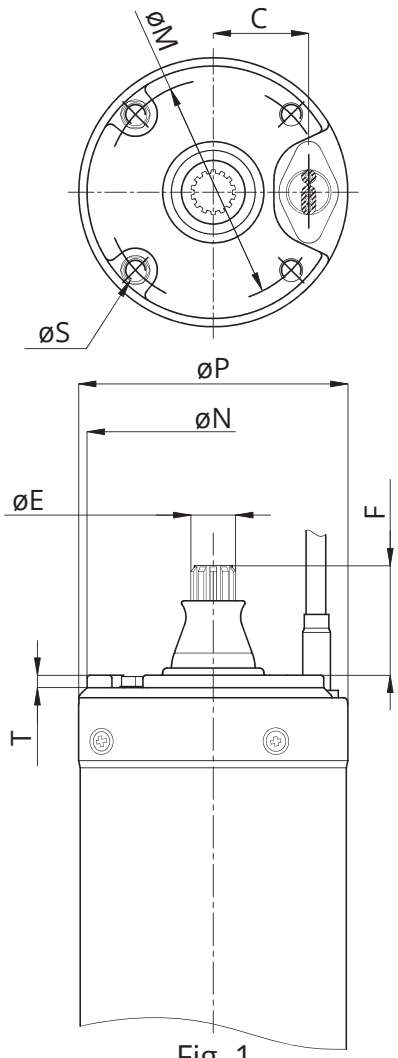

Fig. 1

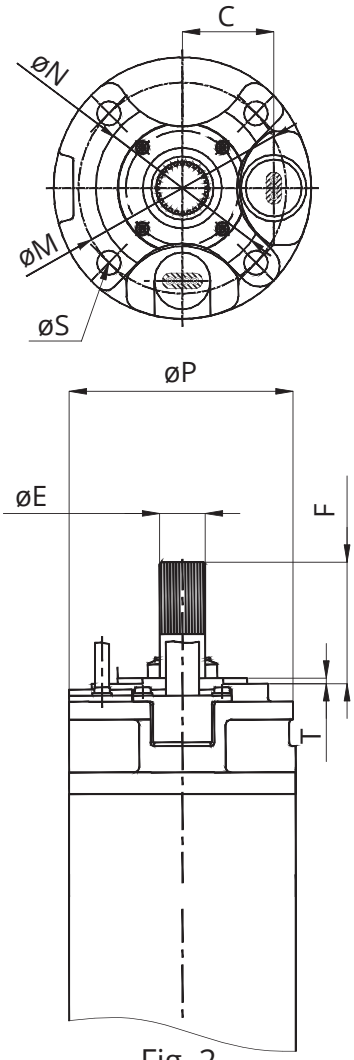

Fig. 2

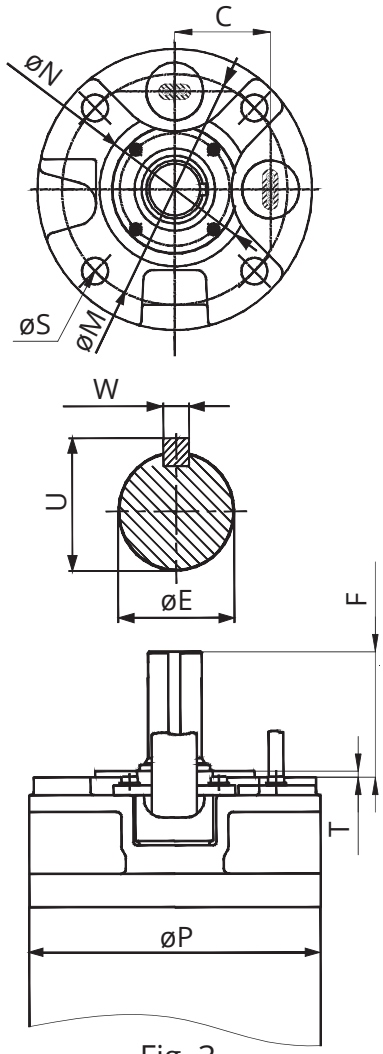

Fig. 3

Motor Type				Mounting Dimension [mm]										
Motor Dia	HP	kW	Pole	Fig	C	E	F	M	N	P	S	T	U	W
4"	0.5	0.37	2	1	33	15.5 +0.05 - 0.03	38	76.2	87.3	94	4-M8	3.5	---	---
	0.75	0.55		1	33	15.5 +0.05 - 0.03	38	76.2	87.3	94	4-M8	3.5	---	---
	1.0	0.75		1	33	15.5 +0.05 - 0.03	38	76.2	87.3	94	4-M8	3.5	---	---
	1.5	1.1		1	33	15.5 +0.05 - 0.03	38	76.2	87.3	94	4-M8	3.5	---	---
	2.0	1.5		1	33	15.5 +0.05 - 0.03	38	76.2	87.3	94	4-M8	3.5	---	---
	3.0	2.2		1	33	15.5 +0.05 - 0.03	38	76.2	87.3	94	4-M8	3.5	---	---
	4.0	3.0		1	33	15.5 +0.05 - 0.03	38	76.2	87.3	94	4-M8	3.5	---	---
	5.5	4.0		1	33	15.5 +0.05 - 0.03	38	76.2	87.3	94	4-M8	3.5	---	---
	7.5	5.5		1	33	15.5 +0.05 - 0.03	38	76.2	87.3	94	4-M8	3.5	---	---
	10	7.5		1	33	15.5 +0.05 - 0.03	38	76.2	87.3	94	4-M8	3.5	---	---
6"	7.5	5.5		2	52.5	25 +0 - 0.033	72.9	111.1	76.2	142	4-M12	7.0	---	---
	10	7.5		2	52.5	25 +0 - 0.033	72.9	111.1	76.2	142	4-M12	7.0	---	---
	12.5	9.3		2	52.5	25 +0 - 0.033	72.9	111.1	76.2	142	4-M12	7.0	---	---
	15	11		2	52.5	25 +0 - 0.033	72.9	111.1	76.2	142	4-M12	7.0	---	---
	17.5	13		2	52.5	25 +0 - 0.033	72.9	111.1	76.2	142	4-M12	7.0	---	---
	20	15		2	52.5	25 +0 - 0.033	72.9	111.1	76.2	142	4-M12	7.0	---	---
	25	18.5		2	52.5	25 +0 - 0.033	72.9	111.1	76.2	142	4-M12	7.0	---	---
	30	22		2	52.5	25 +0 - 0.033	72.9	111.1	76.2	142	4-M12	7.0	---	---
	35	26		2	52.5	25 +0 - 0.033	72.9	111.1	76.2	142	4-M12	7.0	---	---
	40	30		2	52.5	25 +0 - 0.033	72.9	111.1	76.2	142	4-M12	7.0	---	---
	50	37		2	52.5	25 +0 - 0.033	72.9	111.1	76.2	142	4-M12	7.0	---	---
8"	60	45		2	67	38 +0.1 +0.07	101.35-101.6	152.5	127	193.5	4-Φ17.5	4.5	---	---
	75	55		2	67	38 +0.1 +0.07	101.35-101.6	152.5	127	193.5	4-Φ17.5	4.5	---	---
	85	63		2	67	38 +0.1 +0.07	101.35-101.6	152.5	127	193.5	4-Φ17.5	4.5	---	---
	100	75		2	67	38 +0.1 +0.07	101.35-101.6	152.5	127	193.5	4-Φ17.5	4.5	---	---
	125	93		2	67	38 +0.1 +0.07	101.35-101.6	152.5	127	193.5	4-Φ17.5	4.5	---	---
	150	110		2	67	38 +0.1 +0.07	101.35-101.6	152.5	127	193.5	4-Φ17.5	4.5	---	---
10"	175	132		3	81	42.86 +0 - 0.025	101.35-101.6	190.5	127	235	4-Φ22	5.0	47.6	9.5
	200	147		3	81	42.86 +0 - 0.025	101.35-101.6	190.5	127	235	4-Φ22	5.0	47.6	9.5
	230	170		3	81	42.86 +0 - 0.025	101.35-101.6	190.5	127	235	4-Φ22	5.0	47.6	9.5
12"	260	190		3	100	55 +0 - 0.03	127	190.5	127	286	4-Φ22	6.0	59.0	16.0
	300	220		3	100	55 +0 - 0.03	127	190.5	127	286	4-Φ22	6.0	59.0	16.0

Pump connection of 4", 6" and 8" are according to NEMA standard MG 1-18.413.
Pump connection 10" and 12" are Standard Flange according to the drawing on page 22.

TERAL

Pumps and Fans

In-line Pumps

Horizontal Centrifugal Pumps

Freshwater & Sewage Submersible Pumps

Water Supply Units

Coolant Pumps

Ring Blowers

Building Service HVAC

TERAL ASIA LIMITED
Room 1001, 10/F., Olympia Plaza, 255 King's Road, North Point, Hong Kong Tel: +852-2571-0282 Fax: +852 2571-0619 E-mail: sales@teralasia.com

TERAL THAI CO., LTD.
TERAL TRADING & SERVICE CO., LTD.
150 Moo 16 Udomsorayuth Rd., T.Bangkrasan, A.Bangpa-In, Ayutthaya 13160 Thailand Tel: +66-3525-8543 Fax: +66-3525-849

TERAL GENERAL MACHINE (SHANGHAI) CO., LTD.
No. 285, Yuan Qu Road (N), Bei Qiao, Min Hang District, Shanghai 201109, China Tel: +86-21-6490-9128 Fax: +86-21-6490-9126

Affiliated Sister Company: Atai Fuji Motor Co., Ltd. (Ring Blowers & Coolant Pumps)
No. 32, Sec 2, Chang-Hsing Rd., Lu-Chu Hsiang, Taoyuan Hsien, Taiwan, R.O.C. Tel: +886-3-321-3030 Fax: +886-3-321-7890

TERAL MALAYSIA SDN BHD
L-1-1, Block L, No. 2 Jalan PJU 1A/41B, Pusat Dagangan NZX, Ara Jaya, 47301 Petaling Jaya, Selangor, D.E., Malaysia
Tel: +60-3-7885-8305 Fax: +60-3-7887-3305 E-mail: sales.my@teralasia.com

Teral Middle East F.Z.C.
E1-1921C, Ajman Free Zone, Ajman, UAE Tel: 00971 (0)551184953 Email: sales.me@teralasia.com

Teral Pumps & Fans North America Ltd.
2380 United Blvd, Coquiltam, B.C. CANADA V3K 6A3 Tel: +1-(604)-839-1008 Email: salesamerica@teralasia.com

TERAL INC.
Head Office - 230, Moriwake, Miyuki-cho, Fukuyama-city, Hiroshima, 720-0003, Japan Tel: +81-84-955-1111 Fax: +81-84-955-5777
Tokyo Office - TERAL Koraku Bldg., 2-3-27, Koraku, Bunkyo-ku, Tokyo, 112-0004, Japan Tel: +81-3-3818-6890 Fax: +81-3-3818-6790

(Edition Date: Sept 2015 by Teral Asia Limited)

www.teral.net